TILT & TURN SYSTEMS

akpen®

uPVC & ALUMINIUM
WINDOW & DOOR
ACCESSORIES



"We will always be part of your house"

About Us

Our company started its activities with a small workshop in 1988. Nowadays, our company exports to 40 countries employing 370 people and manufacturing products in 26.000 square meters modern and high technology contained closed area factory located in Istanbul Hadimkoy.

Company Akpen, which has adopted the principle of Sustainable Quality Approach and Maximum Customer Satisfaction, has continued its investments in the field of automation and production technologies since 2010 and has become a brand frequently mentioned in the sector with its environmentally friendly high-tech production techniques and developed products.

With more than 30 years of manufacturing experience and experienced staff, it has achieved its goals. Akpen continues to lead his new targets without slowing down and is moving forward with sure steps towards becoming a worldwide known brand.

Content

Product Information 2
Hardware system 3
Surface protection 4
uPVC Profile design 5
Article number structure 6
Symbols and notations 8
Application diagrams 9
Misuse and safety 12
Tilt & Turn, Variable Handle Position, Basic Security Level 14
Tilt & Turn, Variable Handle Position, Medium Security Level 16
Tilt & Turn, Variable Handle Position, High Security Level 18
Tilt first, Variable Handle Position, Basic Security Level 20
Tilt first, Variable Handle Position, Medium Security Level 22
Tilt first, Variable Handle Position, High Security Level 24
Side hung, Variable Handle Position, Basic Security Level 26
Side hung, Variable Handle Position, Medium Security Level 28
Side hung, Variable Handle Position, High Security Level 30
Double sash, Variable Handle Position 32
Double sash, Variable Handle Position 34
Double sash, Double Tilt & Turn with 2 handles. 36
Tilt & Turn, Pitched window, Variable Handle Position 38
Tilt & Turn, Arched window, Variable Handle Position 40
Bottom hung, Variable handle position 42
Tilt & Turn gear 15 mm backset, Variable Handle Position 44
Tilt & Turn gear 7,5 mm backset, Variable Handle Position 46
Tilt & Turn gear 25 / 30 / 40 mm backset, Variable Handle Position 48
Tilt & Turn lockable gear 25 / 30 / 40 mm backset, Variable Handle Position 50
Side hung gear 15 mm backset, zinc gear box, Variable Handle Position 52
Side hung gear 7,5 mm backset, zinc gear box, Variable Handle Position 53
Side hung gear 20 mm backset, zinc gear box, Variable Handle Position 54
Side hung gear 22 mm backset, zinc gear box, Variable Handle Position 55
Side hung gear 25 mm backset, zinc gear box, Variable Handle Position 56
Side hung gear 30 mm backset, zinc gear box, Variable Handle Position 57
Side hung gear 40 mm backset, zinc gear box, Variable Handle Position 58
Side hung gear 15 mm backset, steel gear box, Variable Handle Position 59
Double Sash Gear, Variable handle Position 60
Double Sash Gear for lockable doors 61
Corner Transmission 62
Middle Lock 66
Extension for Middle Lock 67
Bottom Extension 68
Shoot Bolt 70
Extension Lock 72
Stay Arm 73
Hinges 74
Wrong Operation Safety Device with Sash Lifter 84
Microventilation 85
Installation 86
Adjustments 87
Drilling Jigs for Hinges 88
Jigs for Strikers 89
Location of the strikers 90
Profile list 91
Notes 95

Product Information

1. Product information and specified application
Side hung and tilt-turn hardware as covered by this definition is one hand-operation side hung and tilt-turn hardware for windows and balcony doors in building construction. By turning one handle it enables window and balcony door sashes to open into side hung position or into a limited ventilation position due to a scissors mechanism (sash-stay).

Side hung and tilt-turn hardware is used on vertically installed windows and balcony doors made of timber, pvc, aluminium or steel and their corresponding material combinations. Conventional side hung and tilt-turn hardware as covered by this definition, locks window and balcony door sashes and enables various ventilating positions. When closing, the gasket counter force must be overcome as a rule. Differing applications do not correspond to its specified application.

Burglar-resistant windows and balcony doors, windows and balcony doors for damp rooms and those for use in environments with aggressive, corrosive air content, require hardware adapted for the respective application and individually agreed upon performance features.

2. Misuse
- When obstacles are inserted in the opening vicinity between frame and sash, thus preventing its proper specified use.
- When window and balcony door sashes are pressed adversatively or uncontrolled (for example by the wind) up against the window reveals, so that the hardware, the frame material or other individual window or balcony door sash components are damaged or destroyed and/or if consequential damage can arise.
- When additional loads put on windows or balcony door sashes (for example if children swing on the window or balcony door sash).
- When while closing the window and balcony door sashes, someone reaches into the rebate between the sash and frame (injury hazard).

3. Liability
The respective entire hardware set may only consist of hardware components from AKPEN. In the case of inappropriately assembled hardware, and/or in case of non-original accessory components and/or non factory-approved components, no liability is accepted.

4. Product Information
The main goal of the products which are produced for all sorts of PVC and timber windows, is to offer the customer the required comfort. Therefore in the product range, there are alternatives suitable to the customer's demands and window types.

The security levels of the products, which are produced on the basis of basic security systems, can be easily changed. In some cases the change of the locking plate is sufficient to alter the security level. In other instances, the level of security is increased by changing the products. For security reasons, it is beneficial that the windows and balcony doors are produced according to specifications.

For preventing the sash from closing because of wind power when in tilt position, a snapper is mounted on the products. The wrong operation safety device or the sash positioner, which prevent the sash from being wrongly operated, can also be mounted to the product. Furthermore the resistance capacity is enhanced and the products have been developed so that the mechanisms work smoothly.

All mechanisms used at windows and balcony doors are produced in silver colour. For finishing, the nature-friendly plating technology is used. By this alkali based finishing technique, the corrosion resistance is increased due to the Cr+3 ions.

5. Product Performance
The AKPEN hardware can be used on all sashes up to 100 kg, as a standard. When sash weight exceeds 100 kg it is advised that AKPEN is consulted and additional hardware is supplied.

The presentation of the application diagrams on pages 9, 10 and 11 show the relationship between the permissible sash rebate widths and sash rebate heights, depending on various glass weights and/or thicknesses.
The resulting sash rebate dimensions or sash formats (vertically or horizontally) - as well as the maximum sash weight- must not be exceeded under any circumstances.

6. Maintenance
Security relevant hardware components are to be examined at least once a year for stability and wear and tear. Depending on the requirements, the fixing screws are to be tightened and/or parts to be replaced. In addition to this, the following maintenance work is to be carried out annually:
- All movable parts and locking points of the side hung and tilt-turn hardware have to be controlled and greased.
- Only cleaning and maintenance agents, which do not damage the corrosion protection of the hardware components, are to be used.

The hardware adjustments -particularly in the vicinity of the corner pivot rest and the scissors - as well as replacing parts and the unhinging and hinging of the active sash are to be carried out by a specialist company.

Hardware system

AKPEN Tilt & turn and side hung products are designed and manufactured in order to provide ergonomic opening and closing and high level security for users and easy assembly for the window producers.



Locking pins and strikers

AKPEN Hardware system is equipped with standard cylindrical locking pins that have Ø11 mm diameter with roller and ±0,8 mm adjustment range.

In order to provide high level security, AKPEN has mushroom type locking pins as well.

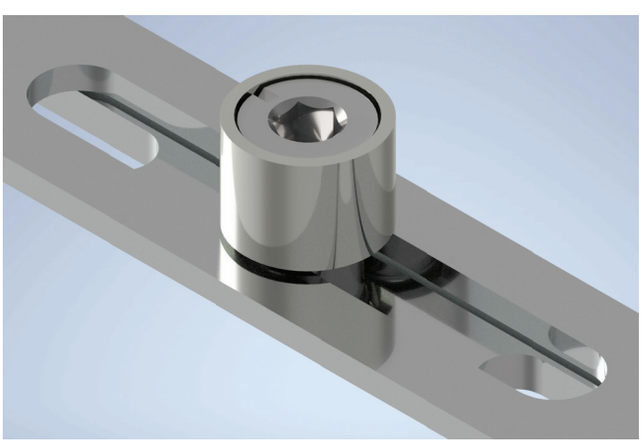

Standard Middle Lock Pin (ML)

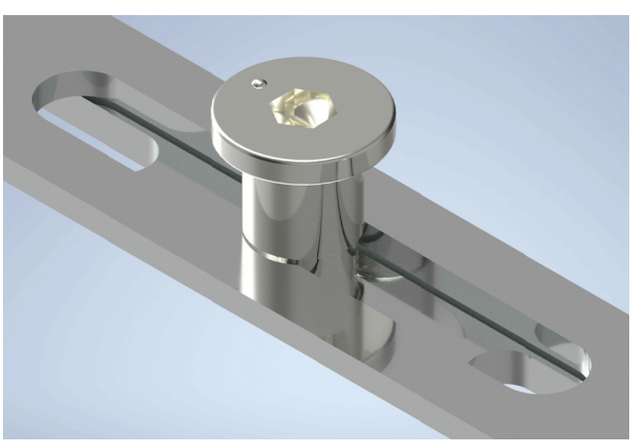

Security Middle Lock Pin (SeML)

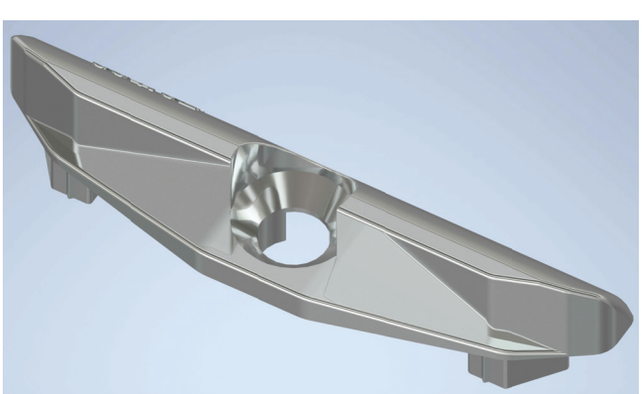

Standard Striker

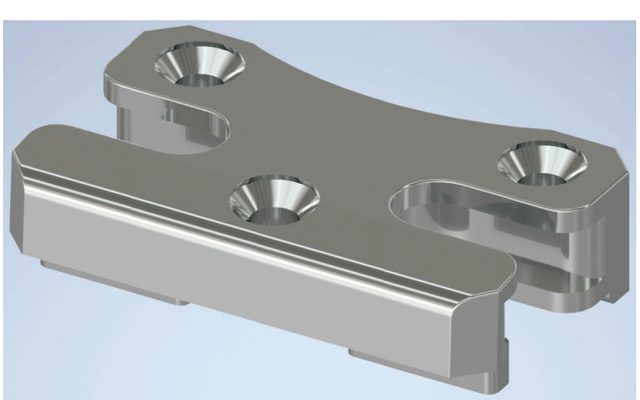

Security Striker

Quality

Surface Protection

All window and door hardware systems of AKPEN has a special surface finish against corrosion. All components are available in silver-look thanks to this technology.
This high level protection is obtained by means of galvanizing, passivation and sealing (varnish-coating).

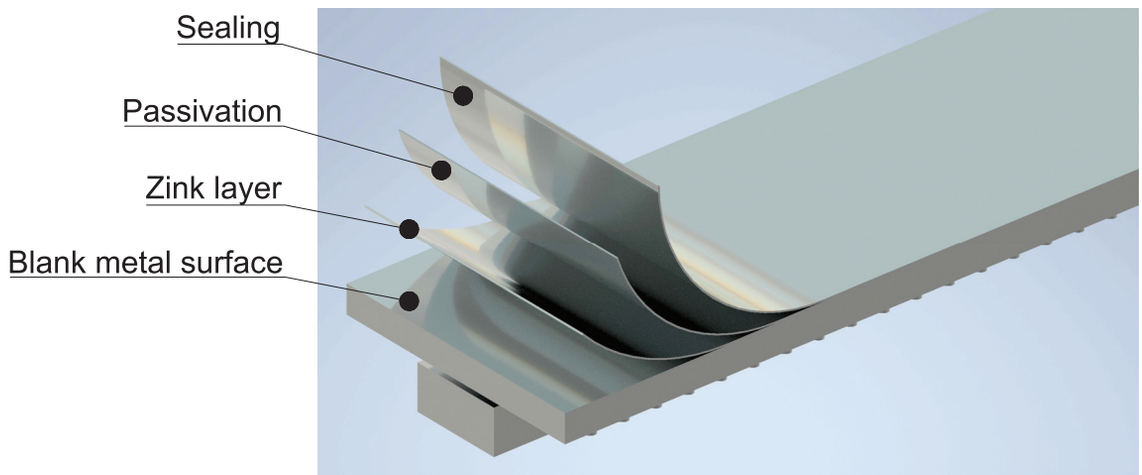

The surface of all AKPEN products is protected by means of 3 layers which provides high resistance for corrosion and thanks to this coating system 5th grade according to EN 1670 is reached (According to AKPEN test results)

Durability

All hardware system are manufactured and tested according to European standards EN 13126-8, GOST 30777 and DSTU Б В.2.6-39. This provides long life durability for users. The capacity of hardware has been ensured by certifications according to the regulation EN 13126/8 tested at an European level.

Every step of design, manufacturing and logistic processes are systematically controlled according to AKPEN high level quality requirements.

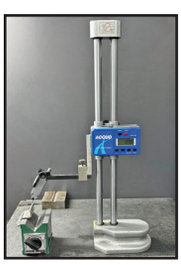
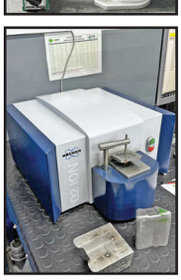

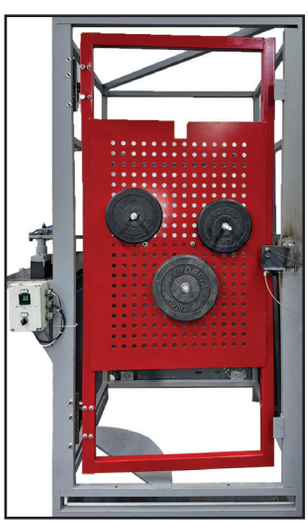
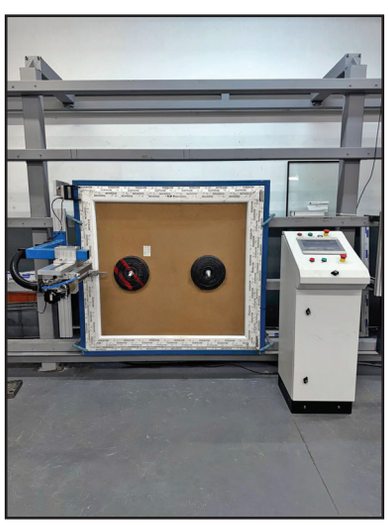

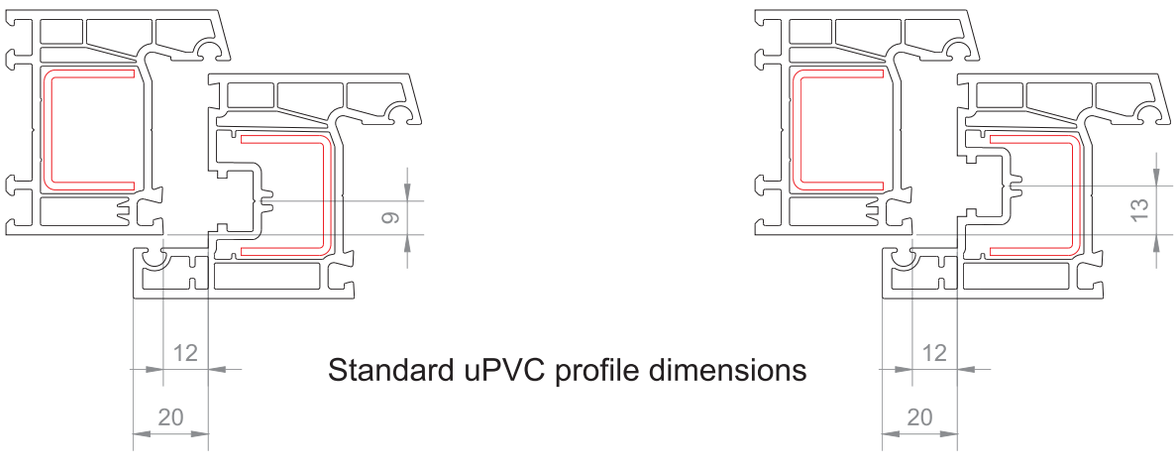

Standard uPVC profile dimensions

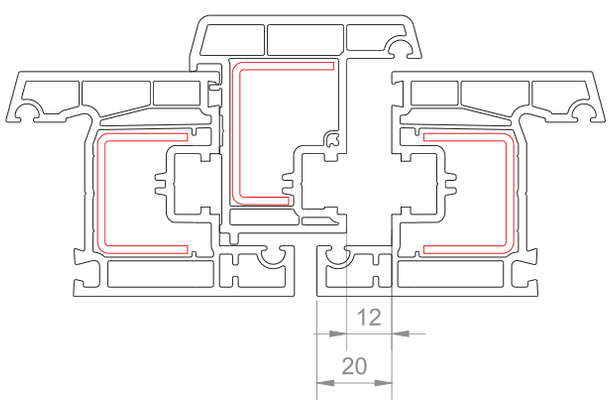

Standard uPVC double sash profile dimensions

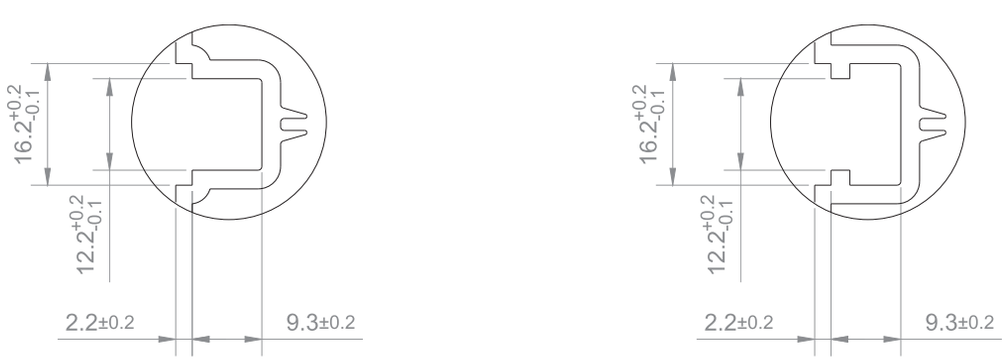

Standard hardware groove dimensions and tolerances

Article Number Structure

XX.XXXXXX.XX.XX
1 2 3 4 5

1- BRAND NUMBER (**XX**.XXXXXX.XX.XX)

00 : Without brand 01 : "AKPEN"

2- PRODUCT GROUP NUMBER (XX.**XXX**XXX.XX.XX)

AAA : Aluminum British handles
AAK : Aluminum bent handle
ACT : Glass wedge
AKK : Alu door handle
AKM : Adjustable door hinge
AKW : Screw
ALN : Allen key
APK : Alu window handle
ASG : Flyscreen equipments
AVK : Handle for parallel slide
BSI : Simple sliding gear
CNT : Scissors for gasket
CTL : Product catalogue
CTP : Pliers for glass wedge
DBL : Steel anchor
EMN : Safety device
FTL : Weather strip for sliding
G57 : H Mullion cover
HHD : New door handle
HHH : Aluminum and zink scraps
HOK : Mullion profile
INC : Plastic window handle (without spindle)
IZK : Striker zamak
IZO : Insulation materials
KIL : Mortise lock
KKI : Multipoint door lock
KLT : Door lock
KRJ : Sash grid elements
MIN : Mini locks
MNA : Alu hinge
MNC : PVC Cemom hinge
MNF : Vent
MNH : Alu speedy hinge
MNP : Plastic covered steel hinge
MNS : Steel hinge
MSP : Steel easy hinge
PLS : Plastic hinge
PNL : Sandwich panel
PRF : Profile
RTK : Furniture marker
SBL : Jig
SK0 : Sliding sash profile
SOB : Mullion connector steel
SRM : Sliding sash with sill
STD : Product show booth
SUR : Insulation wedge for sliding system
TAI : Side hung gear
TCM : Trading products
TED : Ventilation handle
TFL : PTFE material
THI : Thiokol
TKK : Group products
TKM : Group
TPS : Plastic window handle (with spindle)
TSA : Alu sliding parts
TSM : Patallel slide manual systems
TSR : Parallel slide systems
TSS : Tilt and slide systems
TSY : Parallel slide semi-automatic
TTS : Tilt and turn systems
VVV : Tilt system
ZOB : Mullion connector, zamac

3- PRODUCT NUMBER (XX.XXX**XXX**.XX.XX)

a) TTS (Tilt and turn systems)

* TTS100 - TTS199 : Gear
* TTS200 - TTS299 : Stay arm
* TTS300 - TTS399 : Middle lock
* TTS400 - TTS499 : Diverse
* TTS500 - TTS599 : Double sash
* TTS600 - TTS699 : Hinge
* TTS700 - TTS799 : Shoot bolts
* TTS800 - TTS899 : Strikers

b) BSI - TAI (Sliding and side hung gears)

* BSI202 : 15 mm sliding gear, zamak gearbox
* BSI203 : 7,5 mm eko sliding gear, zamak gearbox
* BSI212 : 15 mm lockable sliding gear, zamak gearbox
* BSI222 : 15 mm sliding gear, steel gearbox
* BSI302 : 15 mm sliding gear, zamak gearbox, zamak pin
* BSI303 : 7,5 mm sliding gear, eko zamak gearbox, zamak pin

* TAI100 - TAI199 : 7,5 mm side hung gear
* TAI200 - TAI299 : 15 mm side hung gear
* TAI300 - TAI399 : 20 mm side hung gear
* TAI400 - TAI499 : 22 mm side hung gear
* TAI500 - TAI599 : 25 mm side hung gear
* TAI600 - TAI699 : 40 mm side hung gear
* TAI700 - TAI799 : 30 mm side hung gear

4- PRODUCT SIZE PROPERTIES (XX.XXXXXX.**XX**.XX)

a) Door handle products

* 0L : Left
* 0R : Right
* 00 : D 115 mm
* 01 : D 130 mm
* 02 : D 140 mm
* 03 : D 130 mm + 2 parts in different colours
* 10 : KV + D 115 mm
* 11 : KV + D 130 mm
* 12 : KV + 140 mm

V : Screw KV : Cuttable screw D : Spindle length

b) Window handle types

* 00 : D 35 mm * 01 : D 38 mm * 02 : D 45 mm * 11 : D 38 (8 stops) * 12 : D 45 (8 stops)

Article Number Structure

c) 80 kg - 120 kg Adjustable door hinges
* 00 : Frame part size 14 - 18 mm
KS:Z = Frame Zamak KS:A = Frame Aluminum KN:Z = Sash Zamak KN:A = Sash Aluminum

d) 160 kg Adjustable door hinges
* 00 : Frame part size 15 - 19 mm * 01 : Frame part size 17 - 21 mm * 02 : Frame part size 19 - 23 mm * 03 : Frame part size 23 - 27 mm

e) Hinge group article numbers
* 01 : Eko Hinge * 03 : Heavy Hinge * 05 : Egepen Max. Hinge * 07 : Hinges with combinations
* 02 : AK Hinge * 04 : Egepen Hinge * 06 : Ado Marmara Hinge

f) Side hung and sliding gear sizes
* 01 : 300 mm (M-) * 06 : 1200 mm (M-)
* 02 : 400 mm (M-) * 07 : 1400 mm (M-)
* 03 : 600 mm (M-) * 08 : 1600 mm (M+)
* 04 : 800 mm (M-) * 09 : 1800 mm (M+)
* 05 : 1000 mm (M-) * 10 : 2000 mm (M+)
(M-) : Without centering pin (M+) : With centering pin

g) Lockable gears
* 00 : With standard locking pin * 01 : With security locking pin

h) Mortise locks
* 00 : Standard lock * 01 : Standard lock + locking plate * ZZ : Lock with zamak WC cylinder

i) Tilt and turn parts
* 00 : Without locking pin * 01 : With standard locking pin * 02 : With security locking pin

j) Profile fitting groove positions
* 01 : 9 mm * 02 : 13 mm * 04 : 14 mm

k) Rebate Hinge groove positions and directions
* L1 : Left 13 mm * L4 : Left 14 mm * R1 : Right 13 mm * R4 : Right 14 mm
* L2 : Left 9 mm * R2 : Right 9 mm

l) Shoot bolt striker types
* 01 : Adjustable shoot bolt striker (rounded)
* 02 : Adjustable shoot bolt striker (cornered)
* 03 : Adjustable shoot bolt striker (rounded) with anchorage
* 04 : Adjustable shoot bolt striker (cornered) with anchorage
* 05 : Steel shoot bolt striker
* 06 : Zamak shoot bolt striker, 9 mm
* 07 : Zamak shoot bolt striker 13 mm
* 08 : Double sash thin striker
* 09 : Security striker
* 10 : Top striker for long shoot bolt with lever
* 11 : Bottom striker for long shoot bolt with lever

m) Tilt locking plate types
* 11 : Tilt locking plate vertical, 9 mm
* 12 : Tilt locking plate vertical, 13 mm
* 13 : Tilt locking plate vertical, 10 mm
* 14 : Tilt locking plate vertical, 14 mm
* 21 : Tilt locking plate horizontal, 9 mm
* 22 : Tilt locking plate horizontal, 13 mm
* 23 : Tilt locking plate horizontal, 10 mm
* 24 : Tilt locking plate horizontal, 14 mm

5 - SURFACE TREATMENT TYPES AND SIZES (XX.XXXXXX.XX.**XX**)

a) Surface treatments
* 00 : Zink plated surface
* 01 : RAL 9016 Traffic white
* 02 : RAL 8003 Clay brown
* 03 : RAL 8017 Chocolate brown
* 04 : RAL 8019 Grey brown
* 05 : RAL 8022 Black brown
* 06 : RAL 9005 Jet black
* 07 : RAL 1015 Light ivory
* 08 : RAL 7016 Anthracite grey
* 11 : RAL 1001 Beige
* 12 : RAL 1011 Brown beige
* 13 : Anodized gold - 1
* 14 : Anodized gold - 2
* 15 : Anodized grey
* 16 : Anodized bronze
* 17 : RAL 1013 Oyster white
* 18 : Gold 4
* 19 : Anodized bronze 4
* 20 : Anodized bronze 5

b) Tilt and turn gear lengths
* 00: 250 mm (450 - 550)
* 01 : 400 mm (550-700)
* 02 : 900 mm (700 - 1200)
* 03 : 1100 mm (900 - 1400)
* 04 : 1400 mm (1200 - 1700)
* 05 : 1900 mm (1700 - 2200)
* 06 : 2100 mm (1900 - 2400)

c) Stay arm sizes
* 01 : 450 mm (350 - 600) * 02 : 500 mm (400 - 600) * 03 : 700 mm (600 - 850) * 04 : 950 mm (850 - 1100) * 05 : 1200 mm (1100 - 1350)

d) Middle lock sizes
* 01 : 170 mm * 02 : 500 mm * 03 : 700 mm *04 : 1000 mm * 05 : 1500 mm * 06: 1700 mm

Symbols and notations

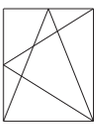

Rectangular tilt and turn system

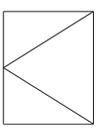

Rectangular side hung system

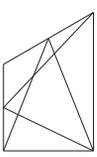

Angular tilt and turn system

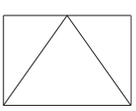

Bottom hung system

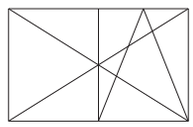

Double sash
Rectangular tilt and turn system

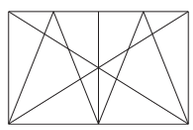

Double sash rectangular
Double tilt and turn system

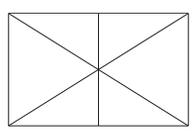

Double sash
Rectangular side hung system

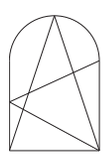

Arched tilt and turn system

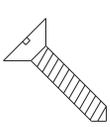

Number of screw holes

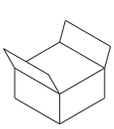

Packaging quantity (pcs)

"ML" : Middle lock (Locking point)

"SeML" : Security middle lock (Locking point)

"SRH" : Sash rebate height

"SRW" : Sash rebate width

Application Diagram

Tilt and turn and Side Hung

Permissible sash dimensions
Max. sash weight 100 kg

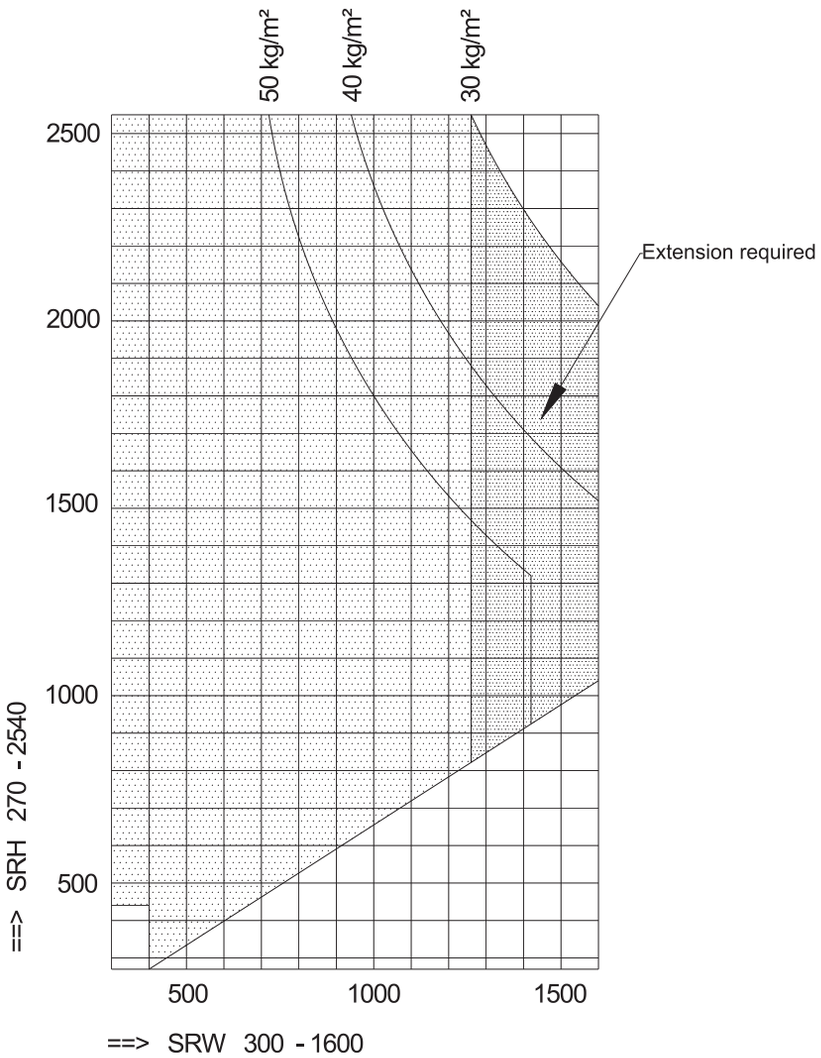

Application Diagram for rectangular sash

Sash rebate width SRW .....300 – 1600 mm
Sash rebate height SRH .....270 – 2540 mm

The information in the application diagram refers to the glass weight in kg/m²

1 mm / m² glass thickness = 2.5 kg

Application Diagram

Tilt and turn and Side Hung

Permissible sash dimensions
Max. sash weight 130 kg

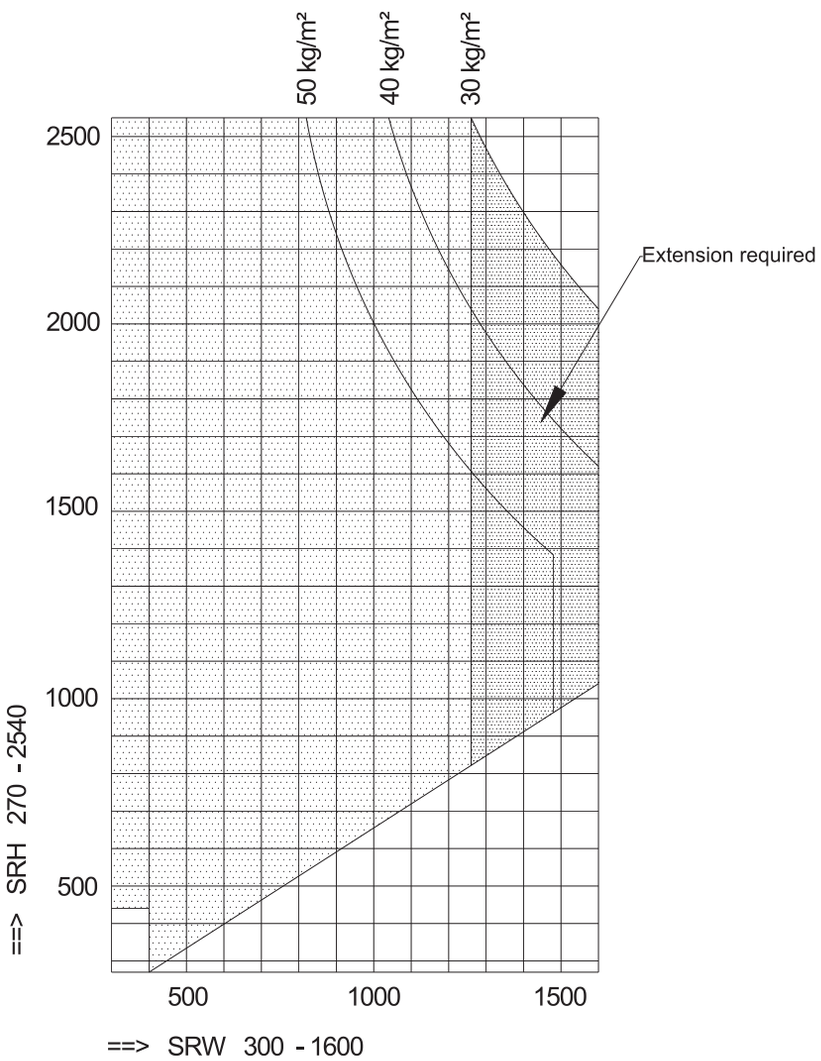

Application Diagram for rectangular sash

Sash rebate width SRW .....300 – 1600 mm
Sash rebate height SRH .....270 – 2540 mm

The information in the application diagram refers to the glass weight in kg/m²

1 mm / m² glass thickness = 2.5 kg

Application Diagram

Tilt sash

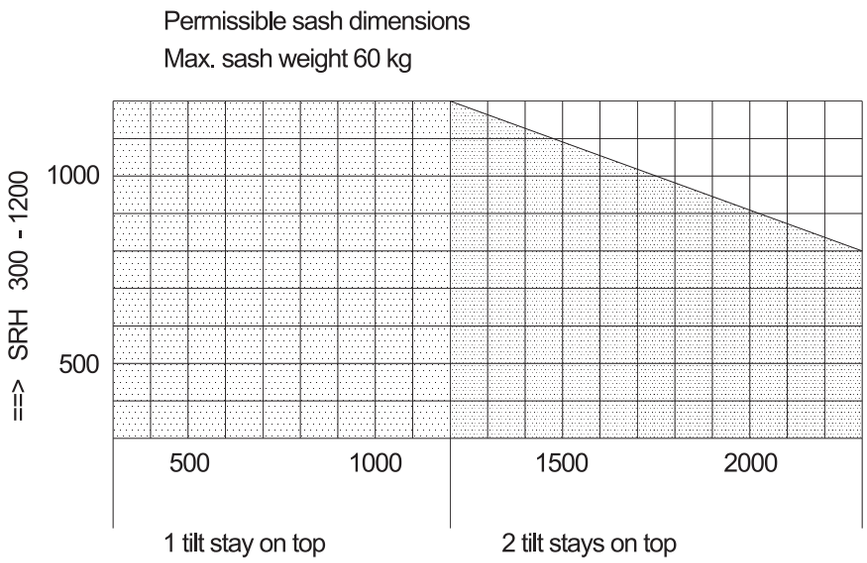

==> SRW 300 - 2300

Application Diagram for rectangular sash

Sash rebate width SRW .....300 – 2300 mm
Sash rebate height SRH .....300 – 1200 mm

The information in the application diagram refers to the glass weight in kg/m²

1 mm / m² glass thickness = 2.5 kg

Misuse and safety

Safety and conventional symbols

Conventional symbol	Meaning
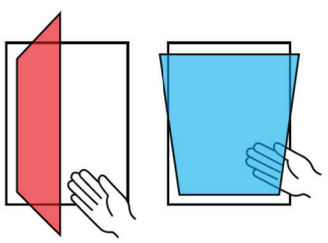	**Danger of injury through trapping of body parts** • Never reach into the opening between the sash and the outer frame when closing windows/doors.
	**Risk of injury from falling through open windows** • Always use stable step ladders. • Protect yourself against falling out of windows. • Do not steady yourself or hold on to the opened sash.
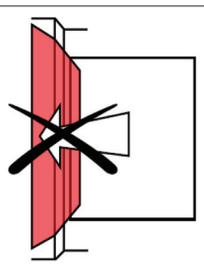	**Risk of injury or damage from pressing the sash against the reveal** • Do not press the sash against the window reveal.
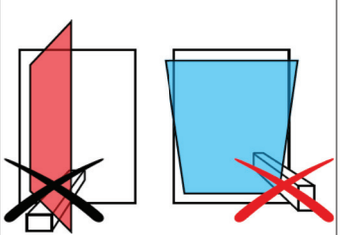	**Risk of injury from trapping parts of the body between the sash and the frame** • Do not insert obstructions into the opening between sash and frame.
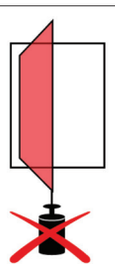	**Risk of injury and material damage from overloading the sash** • Do not overload the sash.
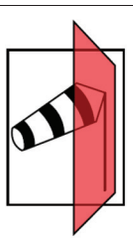	**Risk of injury from the effect of wind** • Prevent wind from acting on the open sash. • During wind/drafts, close and lock windows.

Hardware Combinations

Tilt & Turn, Variable Handle Position, Basic Security Level

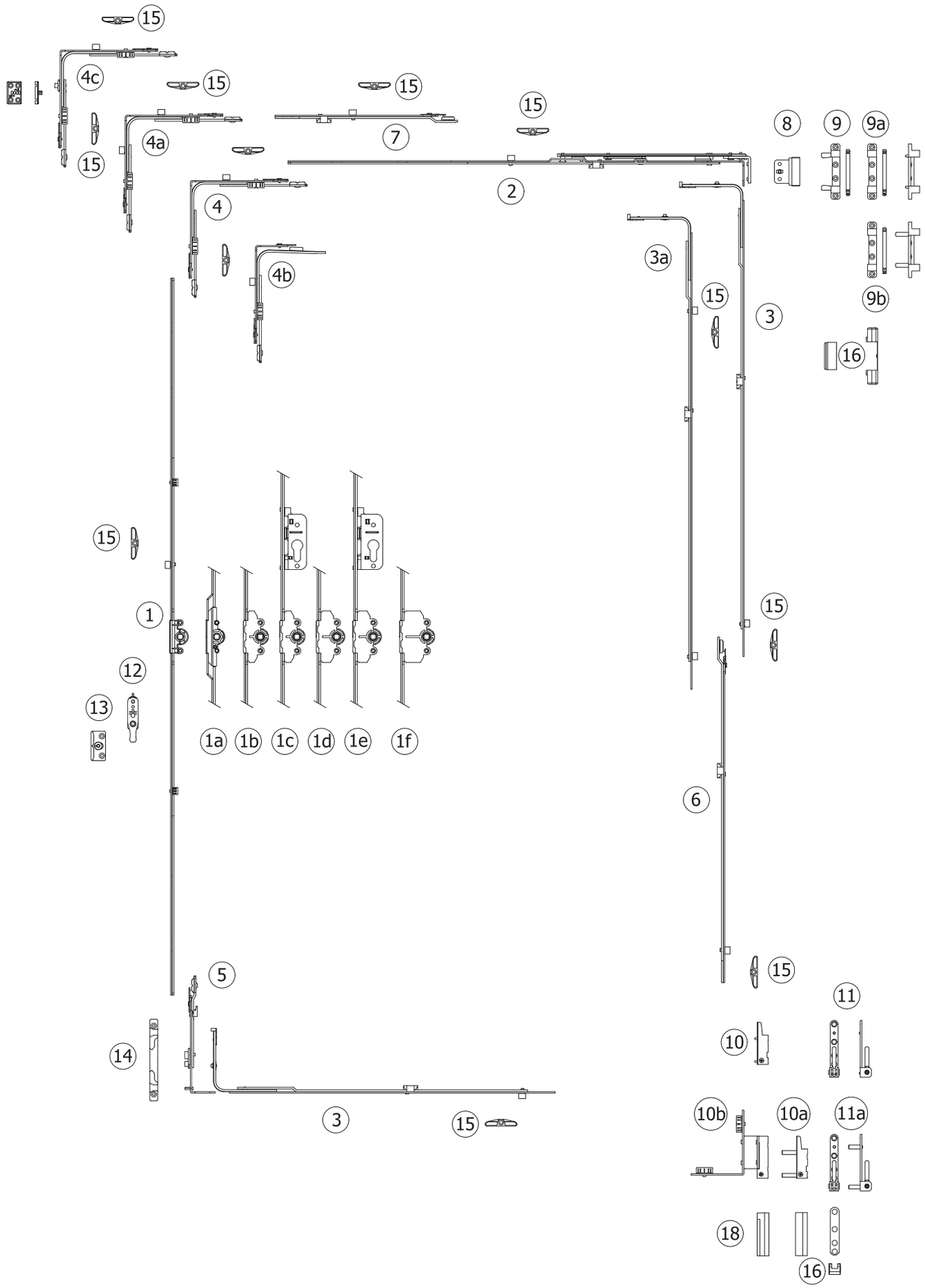

Tilt & Turn, Variable Handle Position, Basic Security Level

1 - Tilt & Turn Gear Variable (15 mm backset)

SRH	Article No
450 - 550	01.TTS100.00.00
550 - 700	01.TTS100.00.01
700 - 1200	01.TTS100.01.02
900 - 1400	01.TTS100.01.03
1200 - 1700	01.TTS100.01.04
1700 - 2200	01.TTS100.01.05
1900 - 2400	01.TTS100.01.06

1a - Tilt & Turn Gear Variable (7,5 mm backset)

SRH	Article No
700 - 1200	01.TTS102.01.02
900 - 1400	01.TTS102.01.03
1200 - 1700	01.TTS102.01.04
1700 - 2200	01.TTS102.01.05
1900 - 2400	01.TTS102.01.06

1b & 1c - Tilt & Turn Gear Variable (25 mm backset & lockable)

SRH	Article No (1b)	Article No (1c)
550 - 700	01.TTS105.00.01	-
700 - 1200	01.TTS105.01.02	-
900 - 1400	01.TTS105.01.03	-
1200 - 1700	01.TTS105.01.04	01.TTS106.01.04
1700 - 2200	01.TTS105.01.05	01.TTS106.01.05
1900 - 2400	01.TTS105.01.06	01.TTS106.01.05

1d & 1e - Tilt & Turn Gear Variable (30 mm backset & lockable)

SRH	Article No (1d)	Article No (1e)
550 - 700	01.TTS101.00.01	-
700 - 1200	01.TTS101.01.02	-
900 - 1400	01.TTS101.01.03	-
1200 - 1700	01.TTS101.01.04	01.TTS103.01.04
1700 - 2200	01.TTS101.01.05	01.TTS103.01.05
1900 - 2400	01.TTS101.01.06	01.TTS103.01.05

1f - Tilt & Turn Gear Variable (40 mm backset & lockable)

SRH	Article No (1d)
550 - 700	01.TTS104.00.01
700 - 1200	01.TTS104.01.02
900 - 1400	01.TTS104.01.03
1200 - 1700	01.TTS104.01.04
1700 - 2200	01.TTS104.01.05
1900 - 2400	01.TTS104.01.06

2 - Stay arm

SRW	Article No
350 - 600	01.TTS210.00.01
400 - 650	01.TTS210.00.02
600 - 850	01.TTS210.01.03
850 - 1100	01.TTS210.01.04
1100 - 1350	01.TTS210.01.05

3 - Middle lock

SRH (SRW *)	Article No
450 - 700 *	01.TTS310.01.01
700 - 1200 *	01.TTS310.01.02
900 - 1400 *	01.TTS310.01.03
1200 - 1700 *	01.TTS310.01.04
1700 - 2200	01.TTS310.01.05
1900 - 2400	01.TTS310.01.06

3a - Middle lock (with additional ML)

SRH (SRW *)	Article No
450 - 700 *	01.TTS310.03.01
700 - 1200 *	01.TTS310.03.02
900 - 1400 *	01.TTS310.03.03
1200 - 1700 *	01.TTS310.03.04
1700 - 2200	01.TTS310.03.05
1900 - 2400	01.TTS310.03.06

4 -	Corner transmission 1 ML	01.TTS401.00.01
4a-	Corner transmission 2 ML	01.TTS401.00.11
4b-	Short corner transmission	01.TTS401.01.01
4c-	Corner transmission with adjustable integrated slit	01.TTS401.00.13
5 -	Bottom extension	01.TTS402.00.00
6 -	Middle lock extension 500	01.TTS410.03.00 **
7 -	Extension lock L=250	01.TTS410.01.00
	Extension lock L=500	01.TTS410.02.00

8 - Top sash hinge

Fitting Axis	Article No
9 / 20	01.TTS403.01.00
13 / 20	01.TTS403.02.00
14 / 20	01.TTS403.04.00

9 -	Stay arm bearing 100 kg ***	01.TTS405.00.00
9a -	Stay arm bearing 100 kg	01.TTS405.01.00
9b -	Stay arm bearing 130 kg	01.TTS405.02.00
10 -	Drill-in corner hinge 100 kg	01.TTS404.00.00
10a -	Drill-in corner hinge 130 kg	01.TTS404.01.00
10b -	Rebate corner hinge 13 mm, left	01.TTS600.L1.00
	Rebate corner hinge 9 mm, left	01.TTS600.L2.00
	Rebate corner hinge 13mm, right	01.TTS600.R1.00
	Rebate corner hinge 9 mm, right	01.TTS600.R2.00
11 -	Corner bearing 100 kg	01.TTS406.00.00
11a -	Corner bearing 130 kg	01.TTS406.01.00
12 -	Wrong op. safety device with sash lifter	01.TTS409.00.00
13 -	Lifting plate	see page 91
14 -	Tilt locking plate	see page 91
15 -	Standard locking plate	see page 91
16 -	Hinge cover set	01.TTS408.00.****
18 -	Rebate hinge cover	01.TTS408.L1.****
		01.TTS408.R1.****

* Only for horizontal use
** For Middle lock 04, 05 and 06
*** With anchorage
**** See page 6 - 7

Tilt & Turn, Variable Handle Position, Medium Security Level

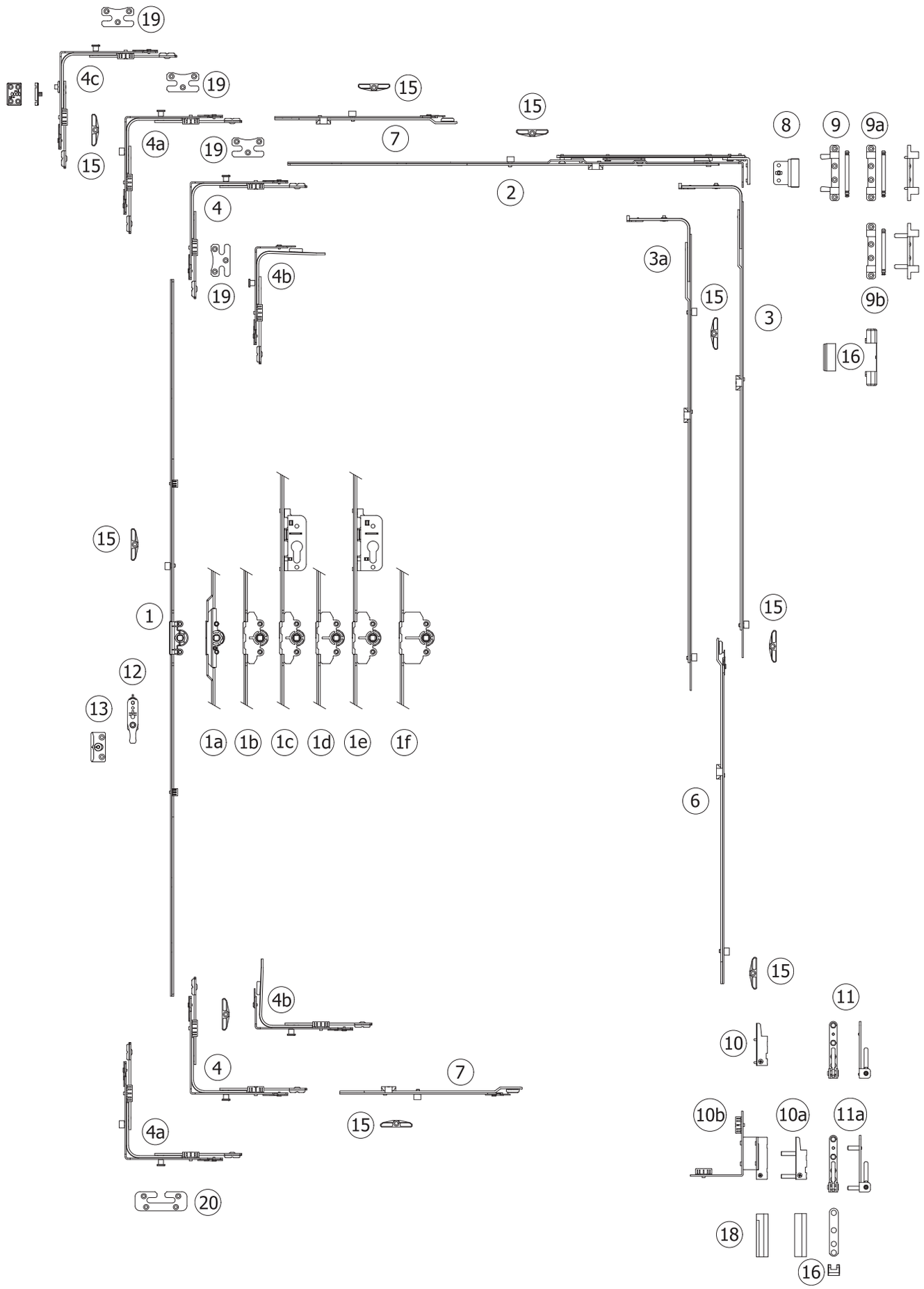

Tilt & Turn, Variable Handle Position, Medium Security Level

1 - Tilt & Turn Gear Variable (15 mm backset)

SRH	Article No
450 - 550	01.TTS100.00.00
550 - 700	01.TTS100.00.01
700 - 1200	01.TTS100.01.02
900 - 1400	01.TTS100.01.03
1200 - 1700	01.TTS100.01.04
1700 - 2200	01.TTS100.01.05
1900 - 2400	01.TTS100.01.06

1a - Tilt & Turn Gear Variable (7,5 mm backset)

SRH	Article No
700 - 1200	01.TTS102.01.02
900 - 1400	01.TTS102.01.03
1200 - 1700	01.TTS102.01.04
1700 - 2200	01.TTS102.01.05
1900 - 2400	01.TTS102.01.06

1b & 1c - Tilt & Turn Gear Variable (25 mm backset & lockable)

SRH	Article No (1b)	Article No (1c)
550 - 700	01.TTS105.00.01	-
700 - 1200	01.TTS105.01.02	-
900 - 1400	01.TTS105.01.03	-
1200 - 1700	01.TTS105.01.04	01.TTS106.01.04
1700 - 2200	01.TTS105.01.05	01.TTS106.01.05
1900 - 2400	01.TTS105.01.06	01.TTS106.01.05

1d & 1e - Tilt & Turn Gear Variable (30 mm backset & lockable)

SRH	Article No (1d)	Article No (1e)
550 - 700	01.TTS101.00.01	-
700 - 1200	01.TTS101.01.02	-
900 - 1400	01.TTS101.01.03	-
1200 - 1700	01.TTS101.01.04	01.TTS103.01.04
1700 - 2200	01.TTS101.01.05	01.TTS103.01.05
1900 - 2400	01.TTS101.01.06	01.TTS103.01.05

1f - Tilt & Turn Gear Variable (40 mm backset & lockable)

SRH	Article No (1d)
550 - 700	01.TTS104.00.01
700 - 1200	01.TTS104.01.02
900 - 1400	01.TTS104.01.03
1200 - 1700	01.TTS104.01.04
1700 - 2200	01.TTS104.01.05
1900 - 2400	01.TTS104.01.06

2 - Stay arm

SRW	Article No
350 - 600	01.TTS210.00.01
400 - 650	01.TTS210.00.02
600 - 850	01.TTS210.01.03
850 - 1100	01.TTS210.01.04
1100 - 1350	01.TTS210.01.05

3 - Middle lock

SRH (SRW *)	Article No
450 - 700 *	01.TTS310.01.01
700 - 1200 *	01.TTS310.01.02
900 - 1400 *	01.TTS310.01.03
1200 - 1700 *	01.TTS310.01.04
1700 - 2200	01.TTS310.01.05
1900 - 2400	01.TTS310.01.06

3a - Middle lock (with additional ML)

SRH (SRW *)	Article No
450 - 700 *	01.TTS310.03.01
700 - 1200 *	01.TTS310.03.02
900 - 1400 *	01.TTS310.03.03
1200 - 1700 *	01.TTS310.03.04
1700 - 2200	01.TTS310.03.05
1900 - 2400	01.TTS310.03.06

4 -	Corner transmission 1 SeML	01.TTS401.00.02
4a-	Corner transmission 1 ML 1 SeML	01.TTS401.00.12
4b-	Short corner transmission Se	01.TTS401.01.02
4c-	Corner transmission with adjustable integrated slit Se	01.TTS401.00.23

6 -	Middle lock extension 500	01.TTS410.03.00 **

7 -	Extension lock L=250	01.TTS410.01.00
	Extension lock L=500	01.TTS410.02.00

8 - Top sash hinge

Fitting Axis	Article No
9 / 20	01.TTS403.01.00
13 / 20	01.TTS403.02.00
14 / 20	01.TTS403.04.00

9 -	Stay arm bearing 100 kg ***	01.TTS405.00.00
9a -	Stay arm bearing 100 kg	01.TTS405.01.00
9b -	Stay arm bearing 130 kg	01.TTS405.02.00

10 -	Drill-in corner hinge 100 kg	01.TTS404.00.00
10a -	Drill-in corner hinge 130 kg	01.TTS404.01.00
10b -	Rebate corner hinge 13 mm, left	01.TTS600.L1.00
	Rebate corner hinge 9 mm, left	01.TTS600.L2.00
	Rebate corner hinge 13mm, right	01.TTS600.R1.00
	Rebate corner hinge 9 mm, right	01.TTS600.R2.00

11 -	Corner bearing 100 kg	01.TTS406.00.00
11a -	Corner bearing 130 kg	01.TTS406.01.00

12 -	Wrong op. safety device with sash lifter	01.TTS409.00.00

13 -	Lifting plate	see page 91

15 -	Standard locking plate	see page 91

16 -	Hinge cover set	01.TTS408.00.****

18 -	Rebate hinge cover	01.TTS408.L1.****
		01.TTS408.R1.****

19 -	Locking plate Se	see page 91

20 -	Tilt locking plate Se	see page 91

* Only for horizontal use
** For Middle lock 04, 05 and 06
*** With anchorage
**** See page 6 - 7

Tilt & Turn, Variable Handle Position, High Security Level

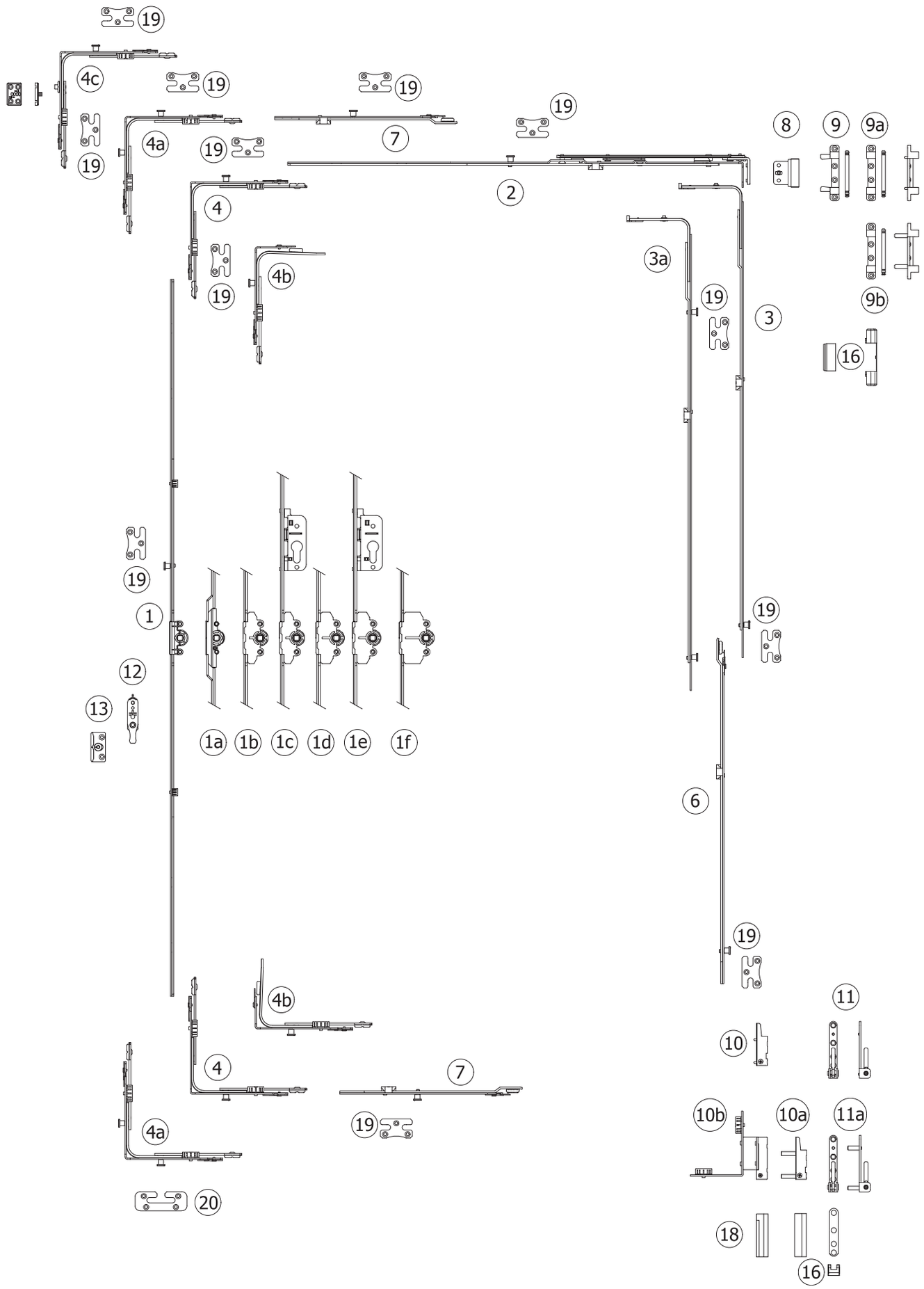

Tilt & Turn, Variable Handle Position, High Security Level

1 - Tilt & Turn Gear Variable Se (15 mm backset)

SRH	Article No
450 - 550	01.TTS100.00.00
550 - 700	01.TTS100.00.01
700 - 1200	01.TTS100.02.02
900 - 1400	01.TTS100.02.03
1200 - 1700	01.TTS100.02.04
1700 - 2200	01.TTS100.02.05
1900 - 2400	01.TTS100.02.06

1a - Tilt & Turn Gear Variable Se (7,5 mm backset)

SRH	Article No
700 - 1200	01.TTS102.02.02
900 - 1400	01.TTS102.02.03
1200 - 1700	01.TTS102.02.04
1700 - 2200	01.TTS102.02.05
1900 - 2400	01.TTS102.02.06

1b & 1c - Tilt & Turn Gear Variable Se (25 mm backset & lockable)

SRH	Article No (1b)	Article No (1c)
550 - 700	01.TTS105.00.01	-
700 - 1200	01.TTS105.02.02	-
900 - 1400	01.TTS105.02.03	-
1200 - 1700	01.TTS105.02.04	01.TTS106.02.04
1700 - 2200	01.TTS105.02.05	01.TTS106.02.05
1900 - 2400	01.TTS105.02.06	01.TTS106.02.05

1d & 1e - Tilt & Turn Gear Variable Se (30 mm backset & lockable)

SRH	Article No (1d)	Article No (1e)
550 - 700	01.TTS101.00.01	-
700 - 1200	01.TTS101.02.02	-
900 - 1400	01.TTS101.02.03	-
1200 - 1700	01.TTS101.02.04	01.TTS103.02.04
1700 - 2200	01.TTS101.02.05	01.TTS103.02.05
1900 - 2400	01.TTS101.02.06	01.TTS103.02.05

1f - Tilt & Turn Gear Variable Se (40 mm backset & lockable)

SRH	Article No (1d)
550 - 700	01.TTS104.00.01
700 - 1200	01.TTS104.02.02
900 - 1400	01.TTS104.02.03
1200 - 1700	01.TTS104.02.04
1700 - 2200	01.TTS104.02.05
1900 - 2400	01.TTS104.02.06

2 - Stay arm Se

SRW	Article No
350 - 600	01.TTS210.00.01
400 - 650	01.TTS210.00.02
600 - 850	01.TTS210.02.03
850 - 1100	01.TTS210.02.04
1100 - 1350	01.TTS210.02.05

3 - Middle lock Se

SRH (SRW *)	Article No
450 - 700 *	01.TTS310.02.01
700 - 1200 *	01.TTS310.02.02
900 - 1400 *	01.TTS310.02.03
1200 - 1700 *	01.TTS310.02.04
1700 - 2200	01.TTS310.02.05
1900 - 2400	01.TTS310.02.06

3a - Middle lock Se (with additional ML)

SRH (SRW *)	Article No
450 - 700 *	01.TTS310.04.01
700 - 1200 *	01.TTS310.04.02
900 - 1400 *	01.TTS310.04.03
1200 - 1700 *	01.TTS310.04.04
1700 - 2200	01.TTS310.04.05
1900 - 2400	01.TTS310.04.06

4 -	Corner transmission 1 SeML	01.TTS401.00.02
4a-	Corner transmission 2 SeML	01.TTS401.00.22
4b-	Short corner transmission Se	01.TTS401.01.02
4c-	Corner transmission with adjustable integrated slit Se	01.TTS401.00.23

6 -	Middle lock extension Se 500	01.TTS410.23.00 **

7 -	Extension lock Se L=250	01.TTS410.21.00
	Extension lock Se L=500	01.TTS410.22.00

8 - Top sash hinge

Fitting Axis	Article No
9 / 20	01.TTS403.01.00
13 / 20	01.TTS403.02.00
14 / 20	01.TTS403.04.00

9 -	Stay arm bearing 100 kg ***	01.TTS405.00.00
9a -	Stay arm bearing 100 kg	01.TTS405.01.00
9b -	Stay arm bearing 130 kg	01.TTS405.02.00

10 -	Drill-in corner hinge 100 kg	01.TTS404.00.00
10a -	Drill-in corner hinge 130 kg	01.TTS404.01.00
10b -	Rebate corner hinge 13 mm, left	01.TTS600.L1.00
	Rebate corner hinge 9 mm, left	01.TTS600.L2.00
	Rebate corner hinge 13mm, right	01.TTS600.R1.00
	Rebate corner hinge 9 mm, right	01.TTS600.R2.00

11 -	Corner bearing 100 kg	01.TTS406.00.00
11a -	Corner bearing 130 kg	01.TTS406.01.00

12 -	Wrong op. safety device with sash lifter	01.TTS409.00.00

13 -	Lifting plate	see page 91

16 -	Hinge cover set	01.TTS408.00.****

18 -	Rebate hinge cover	01.TTS408.L1.****
		01.TTS408.R1.****

19 -	Locking plate Se	see page 91

20 -	Tilt locking plate Se	see page 91

* Only for horizontal use
** For Middle lock 04, 05 and 06
*** With anchorage
**** See page 6 - 7

Tilt First, Variable Handle Position, Basic Security Level

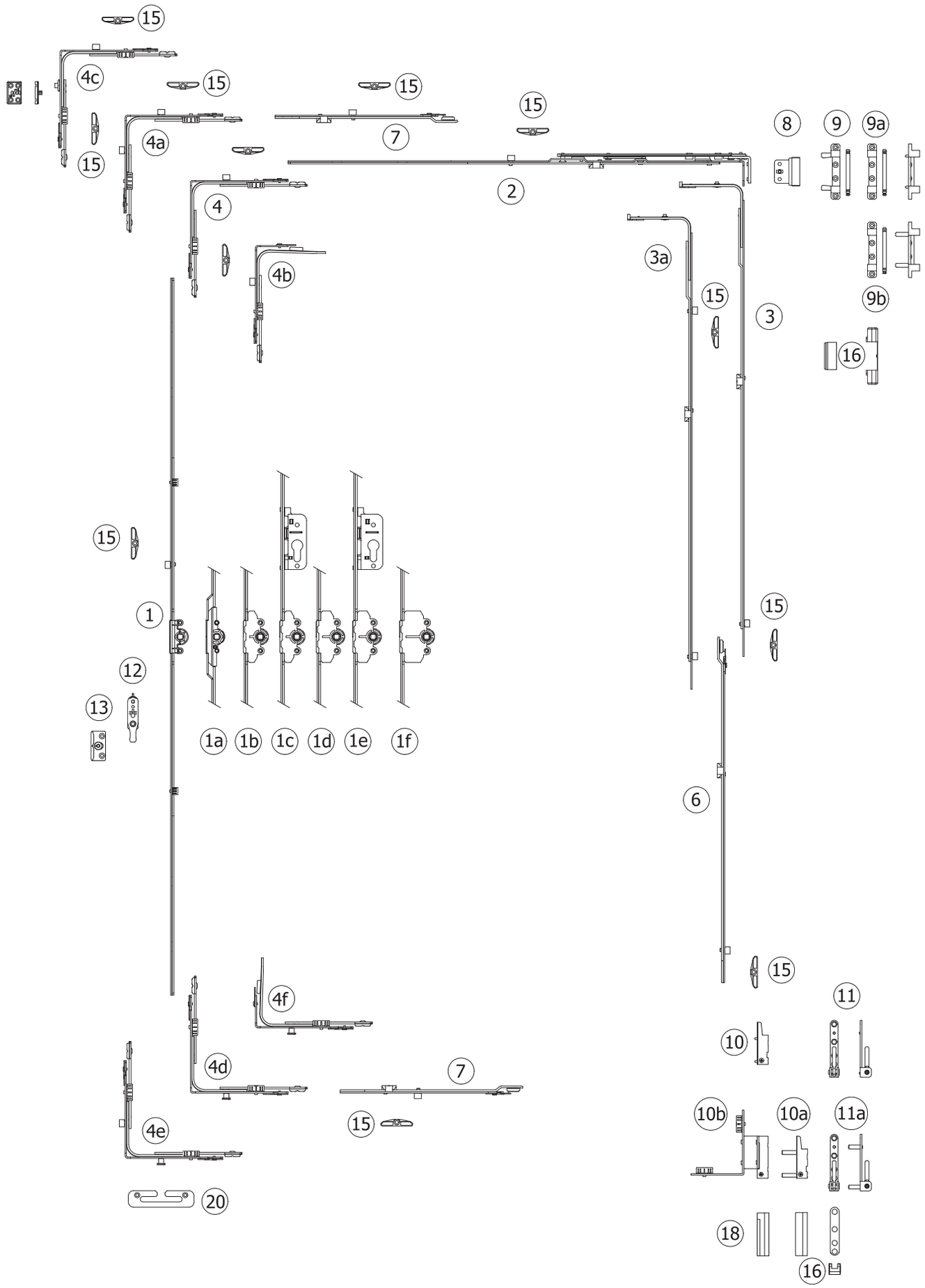

Tilt first, Variable Handle Position, Basic Security Level

1 - Tilt & Turn Gear Variable (15 mm backset)

SRH	Article No
450 - 550	01.TTS100.00.00
550 - 700	01.TTS100.00.01
700 - 1200	01.TTS100.01.02
900 - 1400	01.TTS100.01.03
1200 - 1700	01.TTS100.01.04
1700 - 2200	01.TTS100.01.05
1900 - 2400	01.TTS100.01.06

1a - Tilt & Turn Gear Variable (7,5 mm backset)

SRH	Article No
700 - 1200	01.TTS102.01.02
900 - 1400	01.TTS102.01.03
1200 - 1700	01.TTS102.01.04
1700 - 2200	01.TTS102.01.05
1900 - 2400	01.TTS102.01.06

1b & 1c - Tilt & Turn Gear Variable (25 mm backset & lockable)

SRH	Article No (1b)	Article No (1c)
550 - 700	01.TTS105.00.01	-
700 - 1200	01.TTS105.01.02	-
900 - 1400	01.TTS105.01.03	-
1200 - 1700	01.TTS105.01.04	01.TTS106.01.04
1700 - 2200	01.TTS105.01.05	01.TTS106.01.05
1900 - 2400	01.TTS105.01.06	01.TTS106.01.05

1d & 1e - Tilt & Turn Gear Variable (30 mm backset & lockable)

SRH	Article No (1d)	Article No (1e)
550 - 700	01.TTS101.00.01	-
700 - 1200	01.TTS101.01.02	-
900 - 1400	01.TTS101.01.03	-
1200 - 1700	01.TTS101.01.04	01.TTS103.01.04
1700 - 2200	01.TTS101.01.05	01.TTS103.01.05
1900 - 2400	01.TTS101.01.06	01.TTS103.01.05

1f - Tilt & Turn Gear Variable (40 mm backset & lockable)

SRH	Article No (1d)
550 - 700	01.TTS104.00.01
700 - 1200	01.TTS104.01.02
900 - 1400	01.TTS104.01.03
1200 - 1700	01.TTS104.01.04
1700 - 2200	01.TTS104.01.05
1900 - 2400	01.TTS104.01.06

2 - Stay arm

SRW	Article No
350 - 600	01.TTS211.00.01
400 - 650	01.TTS211.00.02
600 - 850	01.TTS211.01.03
850 - 1100	01.TTS211.01.04
1100 - 1350	01.TTS211.01.05

3 - Middle lock

SRH (SRW *)	Article No
450 - 700 *	01.TTS310.01.01
700 - 1200 *	01.TTS310.01.02
900 - 1400 *	01.TTS310.01.03
1200 - 1700 *	01.TTS310.01.04
1700 - 2200	01.TTS310.01.05
1900 - 2400	01.TTS310.01.06

3a - Middle lock (with additional ML)

SRH (SRW *)	Article No
450 - 700 *	01.TTS310.03.01
700 - 1200 *	01.TTS310.03.02
900 - 1400 *	01.TTS310.03.03
1200 - 1700 *	01.TTS310.03.04
1700 - 2200	01.TTS310.03.05
1900 - 2400	01.TTS310.03.06

4 -	Corner transmission 1 ML	01.TTS401.00.01
4a-	Corner transmission 2 ML	01.TTS401.00.11
4b-	Short corner transmission	01.TTS401.01.01
4c-	Corner transmission with adjustable integrated slit	01.TTS401.00.13
4d-	Corner transmission 1 SML	01.TTS401.00.02
4e-	Corner transmission 1 ML 1 SML	01.TTS401.00.12
4f-	Short corner transmission Se	01.TTS401.01.02

6 -	Middle lock extension 500	01.TTS410.03.00 **

7 -	Extension lock L=250	01.TTS410.01.00
	Extension lock L=500	01.TTS410.01.00

8 - Top sash hinge

Fitting Axis	Article No
9 / 20	01.TTS403.01.00
13 / 20	01.TTS403.02.00
14 / 20	01.TTS403.04.00

9 -	Stay arm bearing 100 kg ***	01.TTS405.00.00
9a -	Stay arm bearing 100 kg	01.TTS405.01.00
9b -	Stay arm bearing 130 kg	01.TTS405.02.00

10 -	Drill-in corner hinge 100 kg	01.TTS404.00.00
10a -	Drill-in corner hinge 130 kg	01.TTS404.01.00
10b -	Rebate corner hinge 13 mm, left	01.TTS600.L1.00
	Rebate corner hinge 9 mm, left	01.TTS600.L2.00
	Rebate corner hinge 13mm, right	01.TTS600.R1.00
	Rebate corner hinge 9 mm, right	01.TTS600.R2.00

11 -	Corner bearing 100 kg	01.TTS406.00.00
11a -	Corner bearing 130 kg	01.TTS406.01.00

12 -	Wrong op. safety device with sash lifter	01.TTS409.00.00

13 -	Lifting plate	see page 91

15 -	Standard locking plate	see page 91

16 -	Hinge cover set	01.TTS408.00.****

18 -	Rebate hinge cover	01.TTS408.L1.****
		01.TTS408.R1.****

20 -	Tilt first locking plate	see page 91

* Only for horizontal use
** For Middle lock 04, 05 and 06
*** With anchorage
**** See page 6 - 7

Tilt first, Variable Handle Position, Medium Security Level

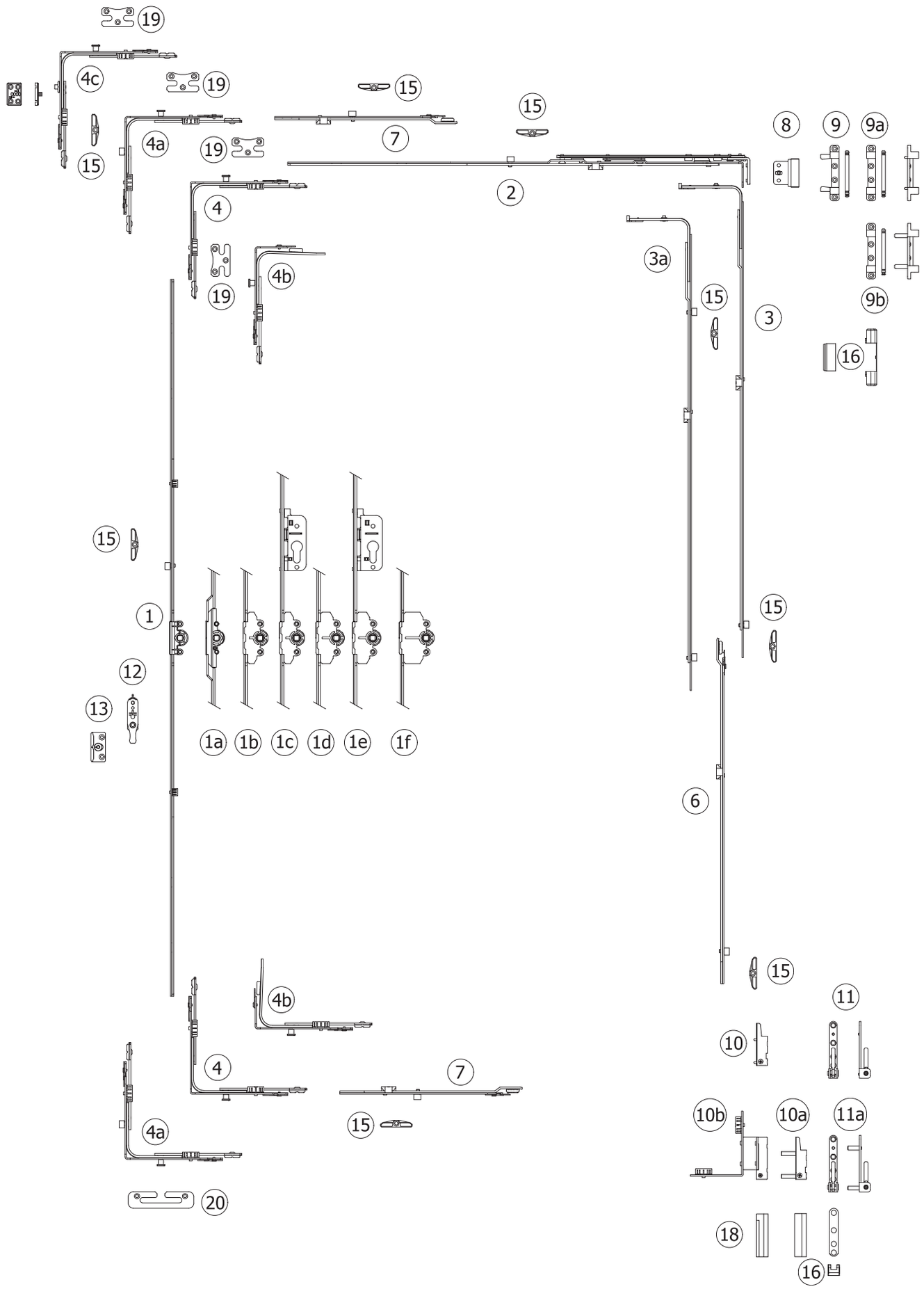

Tilt first, Variable Handle Position, Medium Security Level

1 - Tilt & Turn Gear Variable (15 mm backset)

SRH	Article No
450 - 550	01.TTS100.00.00
550 - 700	01.TTS100.00.01
700 - 1200	01.TTS100.01.02
900 - 1400	01.TTS100.01.03
1200 - 1700	01.TTS100.01.04
1700 - 2200	01.TTS100.01.05
1900 - 2400	01.TTS100.01.06

1a - Tilt & Turn Gear Variable (7,5 mm backset)

SRH	Article No
700 - 1200	01.TTS102.01.02
900 - 1400	01.TTS102.01.03
1200 - 1700	01.TTS102.01.04
1700 - 2200	01.TTS102.01.05
1900 - 2400	01.TTS102.01.06

1b & 1c - Tilt & Turn Gear Variable (25 mm backset & lockable)

SRH	Article No (1b)	Article No (1c)
550 - 700	01.TTS105.00.01	-
700 - 1200	01.TTS105.01.02	-
900 - 1400	01.TTS105.01.03	-
1200 - 1700	01.TTS105.01.04	01.TTS106.01.04
1700 - 2200	01.TTS105.01.05	01.TTS106.01.05
1900 - 2400	01.TTS105.01.06	01.TTS106.01.05

1d & 1e - Tilt & Turn Gear Variable (30 mm backset & lockable)

SRH	Article No (1d)	Article No (1e)
550 - 700	01.TTS101.00.01	-
700 - 1200	01.TTS101.01.02	-
900 - 1400	01.TTS101.01.03	-
1200 - 1700	01.TTS101.01.04	01.TTS103.01.04
1700 - 2200	01.TTS101.01.05	01.TTS103.01.05
1900 - 2400	01.TTS101.01.06	01.TTS103.01.05

1f - Tilt & Turn Gear Variable (40 mm backset & lockable)

SRH	Article No (1d)
550 - 700	01.TTS104.00.01
700 - 1200	01.TTS104.01.02
900 - 1400	01.TTS104.01.03
1200 - 1700	01.TTS104.01.04
1700 - 2200	01.TTS104.01.05
1900 - 2400	01.TTS104.01.06

2 - Stay arm

SRW	Article No
350 - 600	01.TTS211.00.01
400 - 650	01.TTS211.00.02
600 - 850	01.TTS211.01.03
850 - 1100	01.TTS211.01.04
1100 - 1350	01.TTS211.01.05

3 - Middle lock

SRH (SRW *)	Article No
450 - 700 *	01.TTS310.01.01
700 - 1200 *	01.TTS310.01.02
900 - 1400 *	01.TTS310.01.03
1200 - 1700 *	01.TTS310.01.04
1700 - 2200	01.TTS310.01.05
1900 - 2400	01.TTS310.01.06

3a - Middle lock (with additional ML)

SRH (SRW *)	Article No
450 - 700 *	01.TTS310.03.01
700 - 1200 *	01.TTS310.03.02
900 - 1400 *	01.TTS310.03.03
1200 - 1700 *	01.TTS310.03.04
1700 - 2200	01.TTS310.03.05
1900 - 2400	01.TTS310.03.06

4 -	Corner transmission 1 SeML	01.TTS401.00.02
4a-	Corner transmission 1 ML 1 SeML	01.TTS401.00.12
4b-	Short corner transmission Se	01.TTS401.01.02
4c-	Corner transmission with adjustable integrated slit Se	01.TTS401.00.23

6 -	Middle lock extension 500	01.TTS410.03.00 **

7 -	Extension lock L=250	01.TTS410.01.00
	Extension lock L=500	01.TTS410.02.00

8 - Top sash hinge

Fitting Axis	Article No
9 / 20	01.TTS403.01.00
13 / 20	01.TTS403.02.00
14 / 20	01.TTS403.04.00

9 -	Stay arm bearing 100 kg ***	01.TTS405.00.00
9a -	Stay arm bearing 100 kg	01.TTS405.01.00
9b -	Stay arm bearing 130 kg	01.TTS405.02.00

10 -	Drill-in corner hinge 100 kg	01.TTS404.00.00
10a -	Drill-in corner hinge 130 kg	01.TTS404.01.00
10b -	Rebate corner hinge 13 mm, left	01.TTS600.L1.00
	Rebate corner hinge 9 mm, left	01.TTS600.L2.00
	Rebate corner hinge 13mm, right	01.TTS600.R1.00
	Rebate corner hinge 9 mm, right	01.TTS600.R2.00

11 -	Corner bearing 100 kg	01.TTS406.00.00
11a -	Corner bearing 130 kg	01.TTS406.01.00

12 -	Wrong op. safety device with sash lifter	01.TTS409.00.00

13 -	Lifting plate 13 mm	see page 91

15 -	Standard locking plate	see page 91

16 -	Hinge cover set	01.TTS408.00.****

18 -	Rebate hinge cover	01.TTS408.L1.****
		01.TTS408.R1.****

19 -	Locking plate Se	see page 91

20 -	Tilt first locking plate	see page 91

* Only for horizontal use
** For Middle lock 04, 05 and 06
*** With anchorage
**** See page 6 - 7

Tilt first, Variable Handle Position, High Security Level

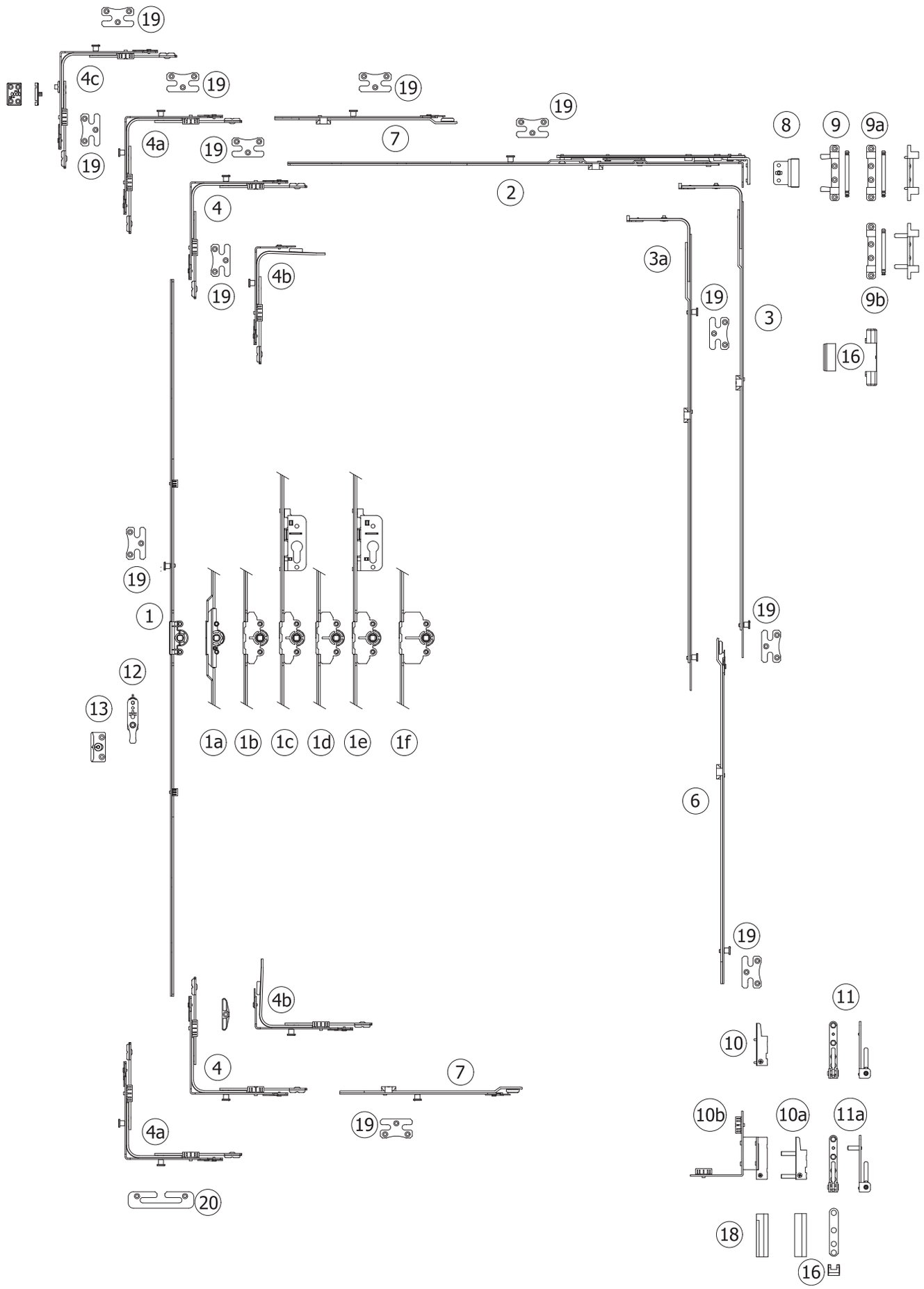

Tilt first, Variable Handle Position, High Security Level

1 - Tilt & Turn Gear Variable (15 mm backset)

SRH	Article No
450 - 550	01.TTS100.00.00
550 - 700	01.TTS100.00.01
700 - 1200	01.TTS100.02.02
900 - 1400	01.TTS100.02.03
1200 - 1700	01.TTS100.02.04
1700 - 2200	01.TTS100.02.05
1900 - 2400	01.TTS100.02.06

1a - Tilt & Turn Gear Variable (7,5 mm backset)

SRH	Article No
700 - 1200	01.TTS102.02.02
900 - 1400	01.TTS102.02.03
1200 - 1700	01.TTS102.02.04
1700 - 2200	01.TTS102.02.05
1900 - 2400	01.TTS102.02.06

1b & 1c - Tilt & Turn Gear Variable (25 mm backset & lockable)

SRH	Article No (1b)	Article No (1c)
550 - 700	01.TTS105.00.01	-
700 - 1200	01.TTS105.02.02	-
900 - 1400	01.TTS105.02.03	-
1200 - 1700	01.TTS105.02.04	01.TTS106.02.04
1700 - 2200	01.TTS105.02.05	01.TTS106.02.05
1900 - 2400	01.TTS105.02.06	01.TTS106.02.05

1d & 1e - Tilt & Turn Gear Variable (30 mm backset & lockable)

SRH	Article No (1d)	Article No (1e)
550 - 700	01.TTS101.00.01	-
700 - 1200	01.TTS101.02.02	-
900 - 1400	01.TTS101.02.03	-
1200 - 1700	01.TTS101.02.04	01.TTS103.02.04
1700 - 2200	01.TTS101.02.05	01.TTS103.02.05
1900 - 2400	01.TTS101.02.06	01.TTS103.02.05

1f - Tilt & Turn Gear Variable (40 mm backset & lockable)

SRH	Article No (1d)
550 - 700	01.TTS104.00.01
700 - 1200	01.TTS104.02.02
900 - 1400	01.TTS104.02.03
1200 - 1700	01.TTS104.02.04
1700 - 2200	01.TTS104.02.05
1900 - 2400	01.TTS104.02.06

2 - Stay arm

SRW	Article No
350 - 600	01.TTS211.00.01
400 - 650	01.TTS211.00.02
600 - 850	01.TTS211.02.03
850 - 1100	01.TTS211.02.04
1100 - 1350	01.TTS211.02.05

3 - Middle lock

SRH (SRW *)	Article No
450 - 700 *	01.TTS310.02.01
700 - 1200 *	01.TTS310.02.02
900 - 1400 *	01.TTS310.02.03
1200 - 1700 *	01.TTS310.02.04
1700 - 2200	01.TTS310.02.05
1900 - 2400	01.TTS310.02.06

3a - Middle lock (with additional ML)

SRH (SRW *)	Article No
450 - 700 *	01.TTS310.04.01
700 - 1200 *	01.TTS310.04.02
900 - 1400 *	01.TTS310.04.03
1200 - 1700 *	01.TTS310.04.04
1700 - 2200	01.TTS310.04.05
1900 - 2400	01.TTS310.04.06

4 -	Corner transmission 1 SeML	01.TTS401.00.02
4a-	Corner transmission 2 SeML	01.TTS401.00.22
4b-	Short corner transmission Se	01.TTS401.01.02
4c-	Corner transmission with adjustable integrated slit Se	01.TTS401.00.23

6 -	Middle lock extension Se 500	01.TTS410.23.00 **

7 -	Extension lock Se L=250	01.TTS410.21.00
	Extension lock Se L=500	01.TTS410.22.00

8 - Top sash hinge

Fitting Axis	Article No
9 / 20	01.TTS403.01.00
13 / 20	01.TTS403.02.00
14 / 20	01.TTS403.04.00

9 -	Stay arm bearing 100 kg ***	01.TTS405.00.00
9a -	Stay arm bearing 100 kg	01.TTS405.01.00
9b -	Stay arm bearing 130 kg	01.TTS405.02.00

10 -	Drill-in corner hinge 100 kg	01.TTS404.00.00
10a -	Drill-in corner hinge 130 kg	01.TTS404.01.00
10b -	Rebate corner hinge 13 mm, left	01.TTS600.L1.00
	Rebate corner hinge 9 mm, left	01.TTS600.L2.00
	Rebate corner hinge 13mm, right	01.TTS600.R1.00
	Rebate corner hinge 9 mm, right	01.TTS600.R2.00

11 -	Corner bearing 100 kg	01.TTS406.00.00
11a -	Corner bearing 130 kg	01.TTS406.01.00

12 -	Wrong op. safety device with sash lifter	01.TTS409.00.00

13 -	Lifting plate 13 mm	see page 91

16 -	Hinge cover set	01.TTS408.00.****

18 -	Rebate hinge cover	01.TTS408.L1.****
		01.TTS408.R1.****

19 -	Locking plate Se	see page 91

20 -	Tilt first locking plate	see page 91

* Only for horizontal use
** For Middle lock 04, 05 and 06
*** With anchorage
**** See page 6 - 7

Side hung, Variable Handle Position, Basic Security Level

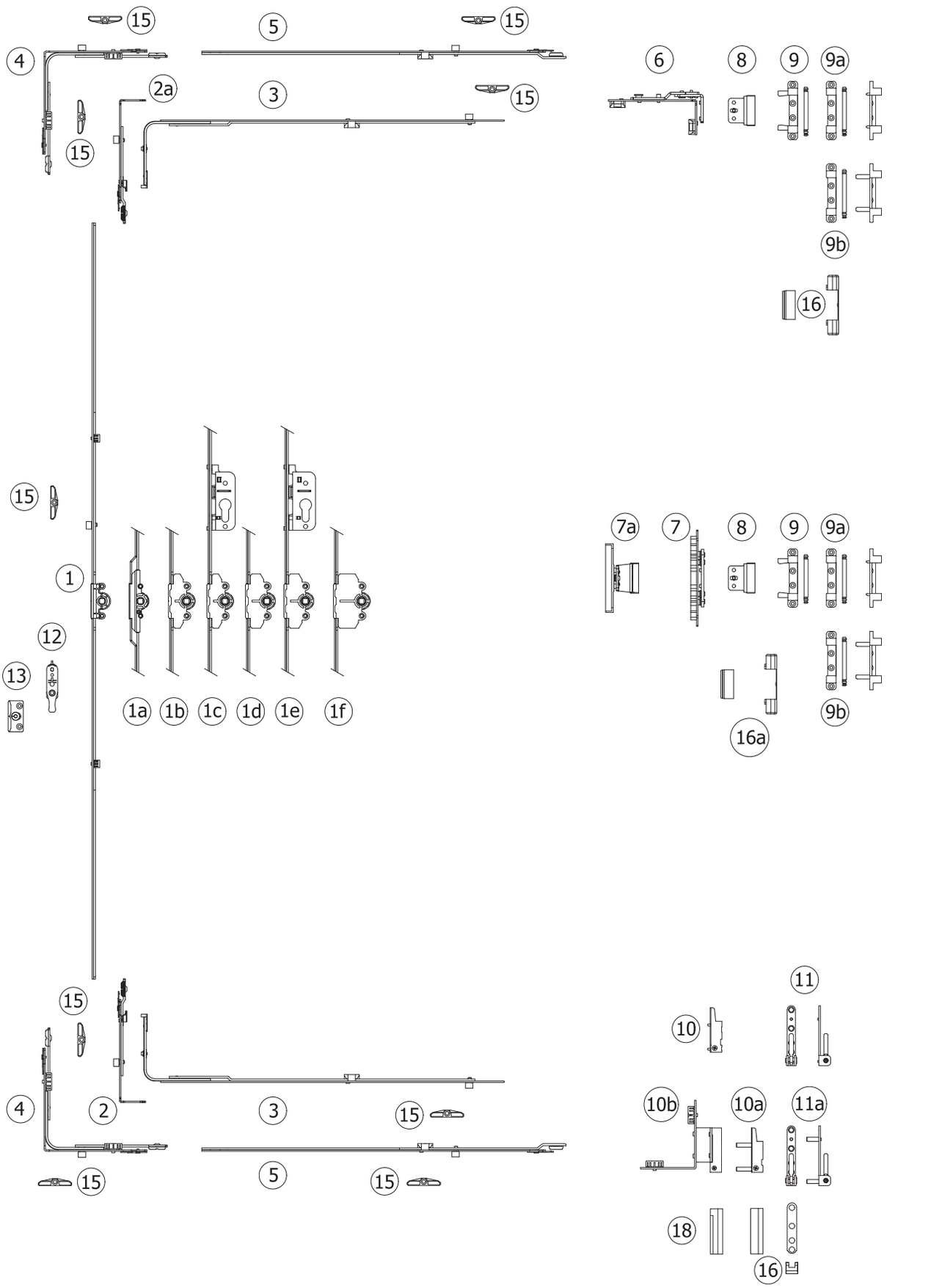

Side hung, Variable Handle Position, Basic Security Level

1 - Tilt & Turn Gear Variable (15 mm backset)

SRH	Article No
450 - 550	01.TTS100.00.00
550 - 700	01.TTS100.00.01
700 - 1200	01.TTS100.01.02
900 - 1400	01.TTS100.01.03
1200 - 1700	01.TTS100.01.04
1700 - 2200	01.TTS100.01.05
1900 - 2400	01.TTS100.01.06

1a - Tilt & Turn Gear Variable (7,5 mm backset)

SRH	Article No
700 - 1200	01.TTS102.01.02
900 - 1400	01.TTS102.01.03
1200 - 1700	01.TTS102.01.04
1700 - 2200	01.TTS102.01.05
1900 - 2400	01.TTS102.01.06

1b & 1c - Tilt & Turn Gear Variable (25 mm backset & lockable)

SRH	Article No (1b)	Article No (1c)
550 - 700	01.TTS105.00.01	-
700 - 1200	01.TTS105.01.02	-
900 - 1400	01.TTS105.01.03	-
1200 - 1700	01.TTS105.01.04	01.TTS106.01.04
1700 - 2200	01.TTS105.01.05	01.TTS106.01.05
1900 - 2400	01.TTS105.01.06	01.TTS106.01.05

1d & 1e - Tilt & Turn Gear Variable (30 mm backset & lockable)

SRH	Article No (1d)	Article No (1e)
550 - 700	01.TTS101.00.01	-
700 - 1200	01.TTS101.01.02	-
900 - 1400	01.TTS101.01.03	-
1200 - 1700	01.TTS101.01.04	01.TTS103.01.04
1700 - 2200	01.TTS101.01.05	01.TTS103.01.05
1900 - 2400	01.TTS101.01.06	01.TTS103.01.05

1f - Tilt & Turn Gear Variable (40 mm backset & lockable)

SRH	Article No (1d)
550 - 700	01.TTS104.00.01
700 - 1200	01.TTS104.01.02
900 - 1400	01.TTS104.01.03
1200 - 1700	01.TTS104.01.04
1700 - 2200	01.TTS104.01.05
1900 - 2400	01.TTS104.01.06

2 -	Bottom extension 180°	01.TTS402.21.00
2a -	Bottom extension 90°	01.TTS402.22.00

3 - Middle lock

SRW	Article No
450 - 700	01.TTS310.01.01
700 - 1200	01.TTS310.01.02
900 - 1400	01.TTS310.01.03
1200 - 1700	01.TTS310.01.04

4 -	Corner transmission 1 ML	01.TTS401.00.01
5 -	Extension lock L=250	01.TTS410.01.00
	Extension lock L=500	01.TTS410.02.00
6 -	Adjustable side hung hinge	01.TTS600.00.00
7 -	3D Adjustable middle hinge	01.TTS600.01.00
7a-	2D Adjustable middle hinge 9 mm	01.TTS600.09.00
	13 mm	01.TTS600.13.00

8 - Top sash hinge

Fitting Axis	Article No
9 / 20	01.TTS403.01.00
13 / 20	01.TTS403.02.00
14 / 20	01.TTS403.04.00

9 -	Stay arm bearing 100 kg ***	01.TTS405.00.00
9a -	Stay arm bearing 100 kg	01.TTS405.01.00
9b -	Stay arm bearing 130 kg	01.TTS405.02.00
10 -	Drill-in corner hinge 100 kg	01.TTS404.00.00
10a -	Drill-in corner hinge 130 kg	01.TTS404.01.00
10b -	Rebate corner hinge 13 mm, left	01.TTS600.L1.00
	Rebate corner hinge 9 mm, left	01.TTS600.L2.00
	Rebate corner hinge 13mm, right	01.TTS600.R1.00
	Rebate corner hinge 9 mm, right	01.TTS600.R2.00
11 -	Corner bearing 100 kg	01.TTS406.00.00
11a -	Corner bearing 130 kg	01.TTS406.01.00
12 -	Wrong op. safety device with sash lifter	01.TTS409.00.00
13 -	Lifting plate	see page 91
15 -	Standard locking plate	see page 91
16 -	Hinge cover set	01.TTS408.00.****
16a-	Middle hinge cover set	01.TTS408.01.****
18 -	Rebate hinge cover	01.TTS408.L1.****
		01.TTS408.R1.****

* Only for horizontal use
** For Middle lock 04, 05 and 06
*** With anchorage
**** See page 6 - 7

Side hung, Variable Handle Position, Medium Security Level

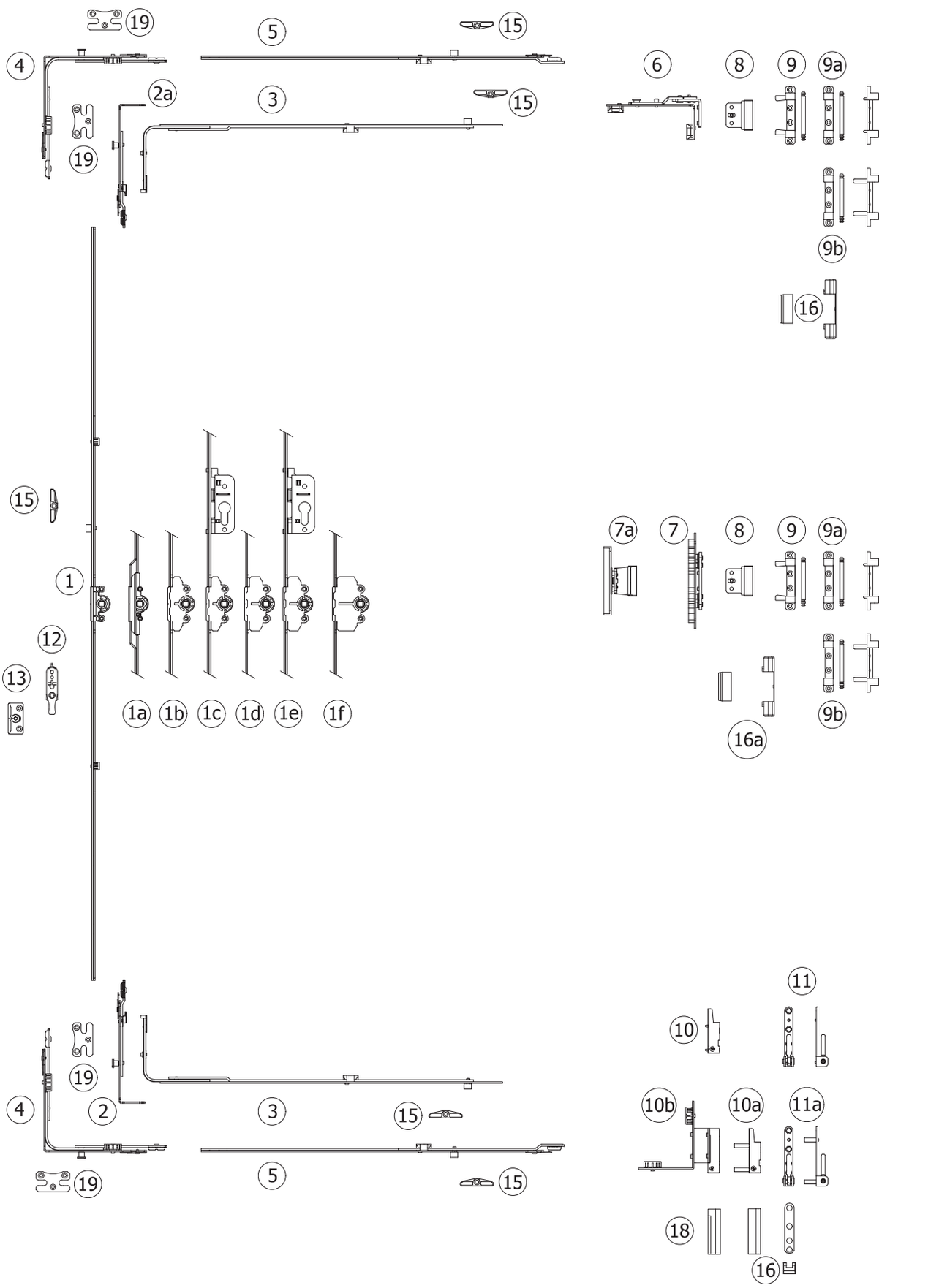

Tilt & Turn, Variable Handle Position, Medium Security Level

1 - Tilt & Turn Gear Variable (15 mm backset)

SRH	Article No
450 - 550	01.TTS100.00.00
550 - 700	01.TTS100.00.01
700 - 1200	01.TTS100.01.02
900 - 1400	01.TTS100.01.03
1200 - 1700	01.TTS100.01.04
1700 - 2200	01.TTS100.01.05
1900 - 2400	01.TTS100.01.06

1a - Tilt & Turn Gear Variable (7,5 mm backset)

SRH	Article No
700 - 1200	01.TTS102.01.02
900 - 1400	01.TTS102.01.03
1200 - 1700	01.TTS102.01.04
1700 - 2200	01.TTS102.01.05
1900 - 2400	01.TTS102.01.06

1b & 1c - Tilt & Turn Gear Variable (25 mm backset & lockable)

SRH	Article No (1b)	Article No (1c)
550 - 700	01.TTS105.00.01	-
700 - 1200	01.TTS105.01.02	-
900 - 1400	01.TTS105.01.03	-
1200 - 1700	01.TTS105.01.04	01.TTS106.01.04
1700 - 2200	01.TTS105.01.05	01.TTS106.01.05
1900 - 2400	01.TTS105.01.06	01.TTS106.01.05

1d & 1e - Tilt & Turn Gear Variable (30 mm backset & lockable)

SRH	Article No (1d)	Article No (1e)
550 - 700	01.TTS101.00.01	-
700 - 1200	01.TTS101.01.02	-
900 - 1400	01.TTS101.01.03	-
1200 - 1700	01.TTS101.01.04	01.TTS103.01.04
1700 - 2200	01.TTS101.01.05	01.TTS103.01.05
1900 - 2400	01.TTS101.01.06	01.TTS103.01.05

1f - Tilt & Turn Gear Variable (40 mm backset & lockable)

SRH	Article No (1d)
550 - 700	01.TTS104.00.01
700 - 1200	01.TTS104.01.02
900 - 1400	01.TTS104.01.03
1200 - 1700	01.TTS104.01.04
1700 - 2200	01.TTS104.01.05
1900 - 2400	01.TTS104.01.06

2 - Bottom extension 180° Se 01.TTS402.21.00
2a - Bottom extension 90° Se 01.TTS402.22.00

3 - Middle lock

SRW	Article No
450 - 700	01.TTS310.01.01
700 - 1200	01.TTS310.01.02
900 - 1400	01.TTS310.01.03
1200 - 1700	01.TTS310.01.04

4 - Corner transmission 1 SeML 01.TTS401.00.02

5 - Extension lock L=250 Se 01.TTS410.21.00
Extension lock L=500 Se 01.TTS410.22.00

6 - Adjustable side hung hinge 01.TTS600.00.00

7 - 3D Adjustable middle hinge 01.TTS600.01.00
7a- 2D Adjustable middle hinge 9 mm 01.TTS600.09.00
13 mm 01.TTS600.13.00

8 - Top sash hinge

Fitting Axis	Article No
9 / 20	01.TTS403.01.00
13 / 20	01.TTS403.02.00
14 / 20	01.TTS403.04.00

9 - Stay arm bearing 100 kg *** 01.TTS405.00.00
9a - Stay arm bearing 100 kg 01.TTS405.01.00
9b - Stay arm bearing 130 kg 01.TTS405.02.00

10 - Drill-in corner hinge 100 kg 01.TTS404.00.00
10a - Drill-in corner hinge 130 kg 01.TTS404.01.00
10b - Rebate corner hinge 13 mm, left 01.TTS600.L1.00
Rebate corner hinge 9 mm, left 01.TTS600.L2.00
Rebate corner hinge 13mm, right 01.TTS600.R1.00
Rebate corner hinge 9 mm, right 01.TTS600.R2.00

11 - Corner bearing 100 kg 01.TTS406.00.00
11a - Corner bearing 130 kg 01.TTS406.01.00

12 - Wrong op. safety device with sash lifter 01.TTS409.00.00

13 - Lifting plate see page 91

15 - Standard locking plate see page 91

16 - Hinge cover set 01.TTS408.00.****
16a- Middle hinge cover set 01.TTS408.01.****

18 - Rebate hinge cover 01.TTS408.L1.****
01.TTS408.R1.****

19 - Locking plate Se see page 91

* Only for horizontal use
** For Middle lock 04, 05 and 06
*** With anchorage
**** See page 6 - 7

Side hung, Variable Handle Position, High Security Level

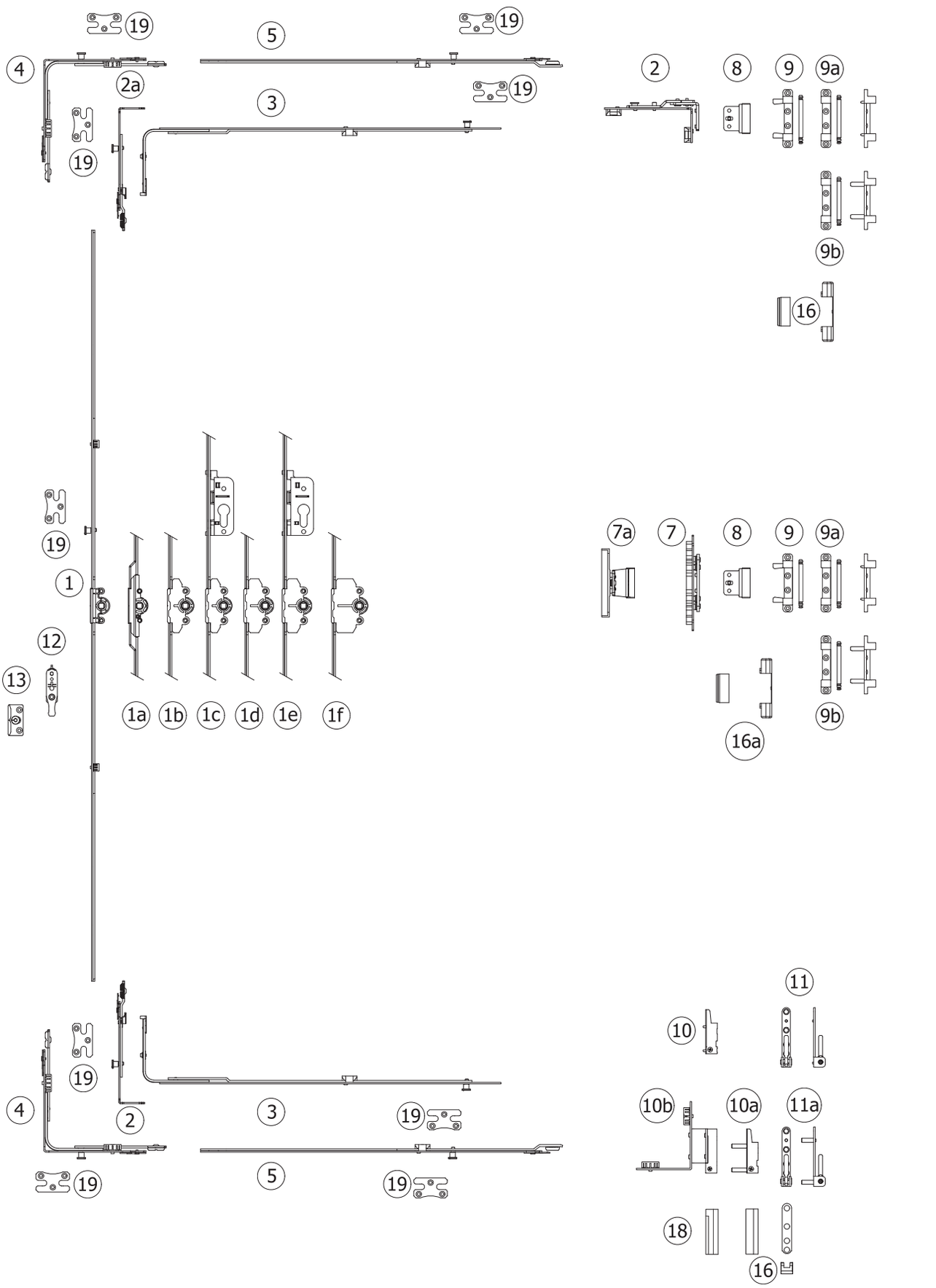

Tilt & Turn, Variable Handle Position, Medium Security Level

1 - Tilt & Turn Gear Variable Se (15 mm backset)

SRH	Article No
450 - 550	01.TTS100.00.00
550 - 700	01.TTS100.00.01
700 - 1200	01.TTS100.02.02
900 - 1400	01.TTS100.02.03
1200 - 1700	01.TTS100.02.04
1700 - 2200	01.TTS100.02.05
1900 - 2400	01.TTS100.02.06

1a - Tilt & Turn Gear Variable Se (7,5 mm backset)

SRH	Article No
700 - 1200	01.TTS102.02.02
900 - 1400	01.TTS102.02.03
1200 - 1700	01.TTS102.02.04
1700 - 2200	01.TTS102.02.05
1900 - 2400	01.TTS102.02.06

1b & 1c - Tilt & Turn Gear Variable Se (25 mm backset & lockable)

SRH	Article No (1b)	Article No (1c)
550 - 700	01.TTS105.00.01	-
700 - 1200	01.TTS105.02.02	-
900 - 1400	01.TTS105.02.03	-
1200 - 1700	01.TTS105.02.04	01.TTS106.02.04
1700 - 2200	01.TTS105.02.05	01.TTS106.02.05
1900 - 2400	01.TTS105.02.06	01.TTS106.02.05

1d & 1e - Tilt & Turn Gear Variable Se (30 mm backset & lockable)

SRH	Article No (1d)	Article No (1e)
550 - 700	01.TTS101.00.01	-
700 - 1200	01.TTS101.02.02	-
900 - 1400	01.TTS101.02.03	-
1200 - 1700	01.TTS101.02.04	01.TTS103.02.04
1700 - 2200	01.TTS101.02.05	01.TTS103.02.05
1900 - 2400	01.TTS101.02.06	01.TTS103.02.05

1f - Tilt & Turn Gear Variable Se(40 mm backset & lockable)

SRH	Article No (1d)
550 - 700	01.TTS104.00.01
700 - 1200	01.TTS104.02.02
900 - 1400	01.TTS104.02.03
1200 - 1700	01.TTS104.02.04
1700 - 2200	01.TTS104.02.05
1900 - 2400	01.TTS104.02.06

2 - Bottom extension 180° Se 01.TTS402.21.00
2a - Bottom extension 90° Se 01.TTS402.22.00

3 - Middle lock Se

SRW	Article No
450 - 700	01.TTS310.02.01
700 - 1200	01.TTS310.02.02
900 - 1400	01.TTS310.02.03
1200 - 1700	01.TTS310.02.04

4 - Corner transmission 1 SeML 01.TTS401.00.02

5 - Extension lock L=250 Se 01.TTS410.21.00
Extension lock L=500 Se 01.TTS410.22.00

6 - Adjustable side hung hinge 01.TTS600.00.00

7 - 3D Adjustable middle hinge 01.TTS600.01.00
7a- 2D Adjustable middle hinge 9 mm 01.TTS600.09.00
13 mm 01.TTS600.13.00

8 - Top sash hinge

Fitting Axis	Article No
9 / 20	01.TTS403.01.00
13 / 20	01.TTS403.02.00
14 / 20	01.TTS403.04.00

9 - Stay arm bearing 100 kg *** 01.TTS405.00.00
9a - Stay arm bearing 100 kg 01.TTS405.01.00
9b - Stay arm bearing 130 kg 01.TTS405.02.00

10 - Drill-in corner hinge 100 kg 01.TTS404.00.00
10a - Drill-in corner hinge 130 kg 01.TTS404.01.00
10b - Rebate corner hinge 13 mm, left 01.TTS600.L1.00
Rebate corner hinge 9 mm, left 01.TTS600.L2.00
Rebate corner hinge 13mm, right 01.TTS600.R1.00
Rebate corner hinge 9 mm, right 01.TTS600.R2.00

11 - Corner bearing 100 kg 01.TTS406.00.00
11a - Corner bearing 130 kg 01.TTS406.01.00

12 - Wrong op. safety device with sash lifter 01.TTS409.00.00

13 - Lifting plate see page 91

16 - Hinge cover set 01.TTS408.00.****
16a- Middle hinge cover set 01.TTS408.01.****

18 - Rebate hinge cover 01.TTS408.L1.****
01.TTS408.R1.****

19 - Locking plate Se see page 91

* Only for horizontal use
** For Middle lock 04, 05 and 06
*** With anchorage
**** See page 6 - 7

Double sash, Variable Handle Position

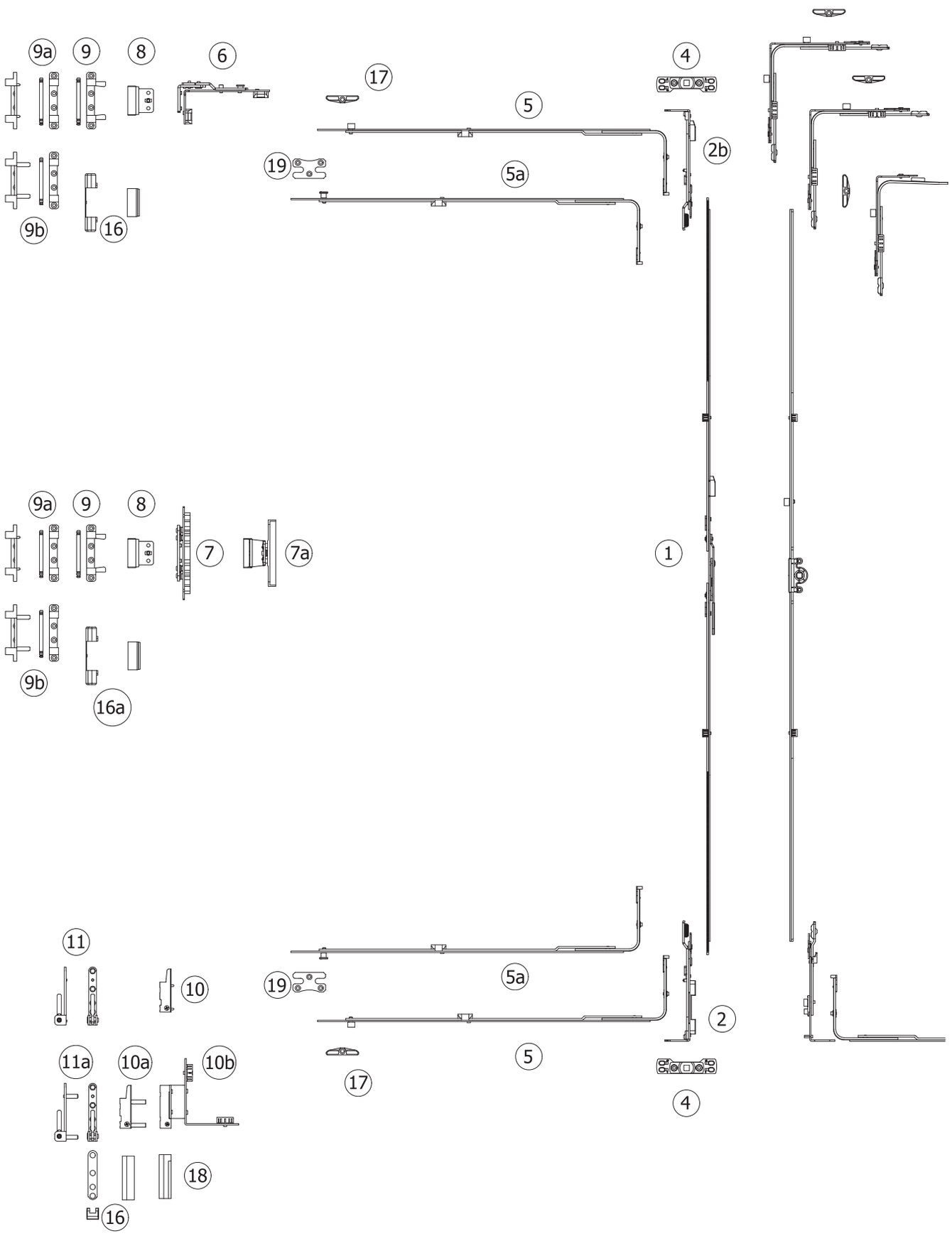

Double sash, Variable Handle Position

1 - Double sash gear with lever

SRH	Article No
550 - 700	01.TTS500.01.01
700 - 1200	01.TTS500.01.02
900 - 1400	01.TTS500.01.03
1200 - 1700	01.TTS500.01.04
1700 - 2200	01.TTS500.01.05
1900 - 2400	01.TTS500.01.06

2 -	Shoot bolt, bottom	01.TTS700.01.00
2a -	Shoot bolt, top	01.TTS700.02.00

4 -	Striker for shoot	see page ?

5 - Middle lock

SRW	Article No
450 - 700	01.TTS310.01.01
700 - 1200	01.TTS310.01.02
900 - 1400	01.TTS310.01.03
1200 - 1700	01.TTS310.01.04

5a - Middle lock Se

SRW	Article No
450 - 700	01.TTS310.02.01
700 - 1200	01.TTS310.02.02
900 - 1400	01.TTS310.02.03
1200 - 1700	01.TTS310.02.04

6 -	Adjustable side hung hinge	01.TTS600.00.00

7 -	3D Adjustable middle hinge	01.TTS600.01.00
7a-	2D Adjustable middle hinge 9 mm	01.TTS600.09.00
	13 mm	01.TTS600.13.00

8 - Top sash hinge

Fitting Axis	Article No
9 / 20	01.TTS403.01.00
13 / 20	01.TTS403.02.00
14 / 20	01.TTS403.04.00

9 -	Stay arm bearing 100 kg ***	01.TTS405.00.00
9a -	Stay arm bearing 100 kg	01.TTS405.01.00
9b -	Stay arm bearing 130 kg	01.TTS405.02.00

10 -	Drill-in corner hinge 100 kg	01.TTS404.00.00
10a -	Drill-in corner hinge 130 kg	01.TTS404.01.00
10b -	Rebate corner hinge 13 mm, left	01.TTS600.L1.00
	Rebate corner hinge 9 mm, left	01.TTS600.L2.00
	Rebate corner hinge 13mm, right	01.TTS600.R1.00
	Rebate corner hinge 9 mm, right	01.TTS600.R2.00

11 -	Corner bearing 100 kg	01.TTS406.00.00
11a -	Corner bearing 130 kg	01.TTS406.01.00

15 -	Standard locking plate	see page 91

16 -	Hinge cover set	01.TTS408.00.****

17 -	Standard locking plate	see page 91

18 -	Rebate hinge cover	01.TTS408.L1.****
		01.TTS408.R1.****

19 -	Locking plate Se	see page 91

* Only for horizontal use
** For Middle lock 04, 05 and 06
*** With anchorage
**** See page 6 - 7

Double sash, Variable Handle Position

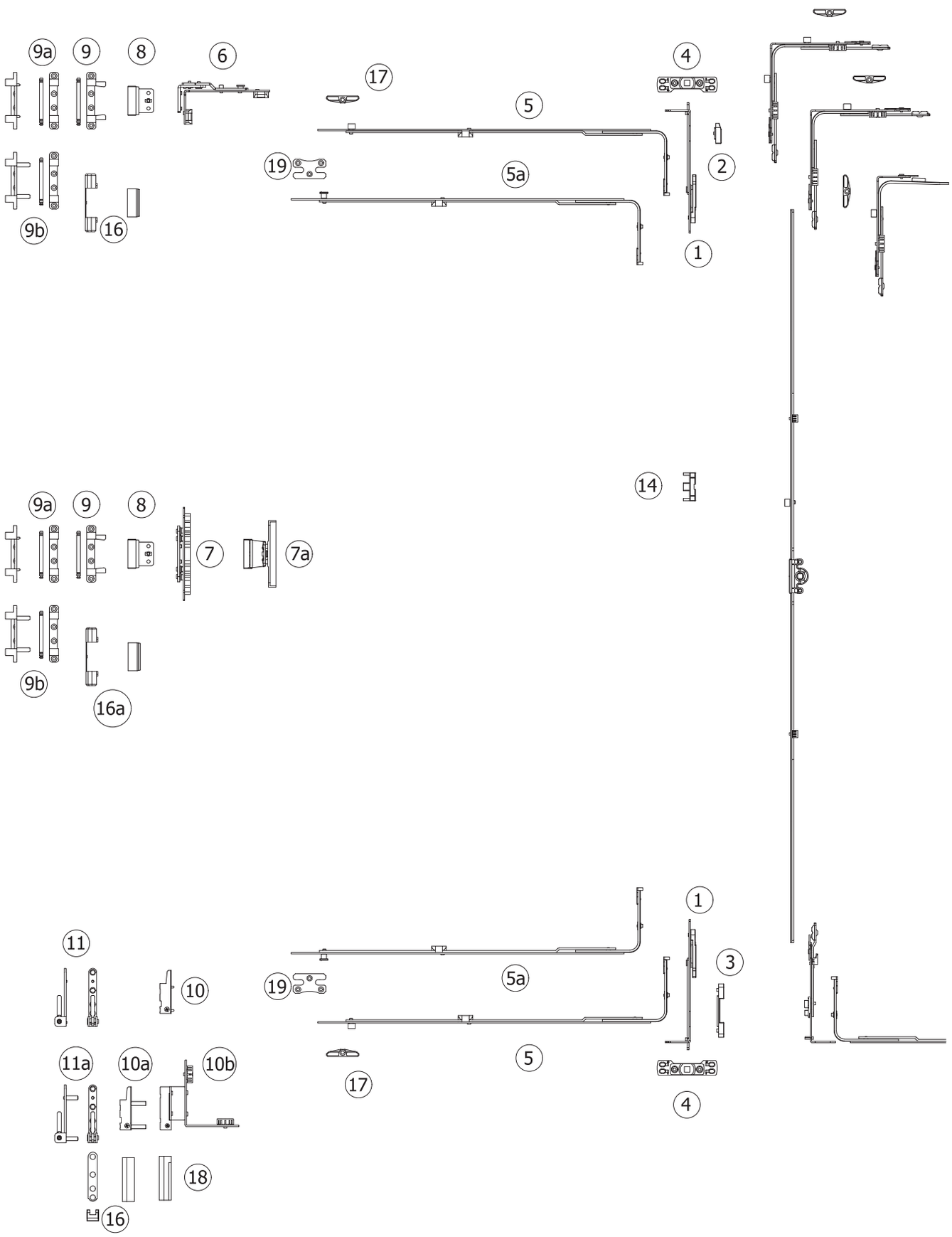

Double sash, Variable Handle Position

1 -	Shoot bolt with lever	01.TTS700.05.00
2 -	Striker for top shoot bolt	01.TTS800.10.00
3 -	Tilt striker for shoot bolt	01.TTS700.02.00
4 -	Striker for shoot	see page ?

5 - Middle lock

SRW	Article No
450 - 700	01.TTS310.01.01
700 - 1200	01.TTS310.01.02
900 - 1400	01.TTS310.01.03
1200 - 1700	01.TTS310.01.04

5a - Middle lock Se

SRW	Article No
450 - 700	01.TTS310.02.01
700 - 1200	01.TTS310.02.02
900 - 1400	01.TTS310.02.03
1200 - 1700	01.TTS310.02.04

6 -	Adjustable side hung hinge	01.TTS600.00.00
7 -	3D Adjustable middle hinge	01.TTS600.01.00
7a-	2D Adjustable middle hinge 9 mm	01.TTS600.09.00
	13 mm	01.TTS600.13.00

8 - Top sash hinge

Fitting Axis	Article No
9 / 20	01.TTS403.01.00
13 / 20	01.TTS403.02.00
14 / 20	01.TTS403.04.00

9 -	Stay arm bearing 100 kg ***	01.TTS405.00.00
9a -	Stay arm bearing 100 kg	01.TTS405.01.00
9b -	Stay arm bearing 130 kg	01.TTS405.02.00
10 -	Drill-in corner hinge 100 kg	01.TTS404.00.00
10a -	Drill-in corner hinge 130 kg	01.TTS404.01.00
10b -	Rebate corner hinge 13 mm, left	01.TTS600.L1.00
	Rebate corner hinge 9 mm, left	01.TTS600.L2.00
	Rebate corner hinge 13mm, right	01.TTS600.R1.00
	Rebate corner hinge 9 mm, right	01.TTS600.R2.00
11 -	Corner bearing 100 kg	01.TTS406.00.00
11a -	Corner bearing 130 kg	01.TTS406.01.00
15 -	Standard locking plate	see page 91
16 -	Hinge cover set	01.TTS408.00.****
17 -	Standard locking plate	see page 91
18 -	Rebate hinge cover	01.TTS408.L1.****
		01.TTS408.R1.****
19 -	Locking plate Se	see page 91

* Only for horizontal use
** For Middle lock 04, 05 and 06
*** With anchorage
**** See page 6 - 7

Double sash, double tilt and turn with 2 handles

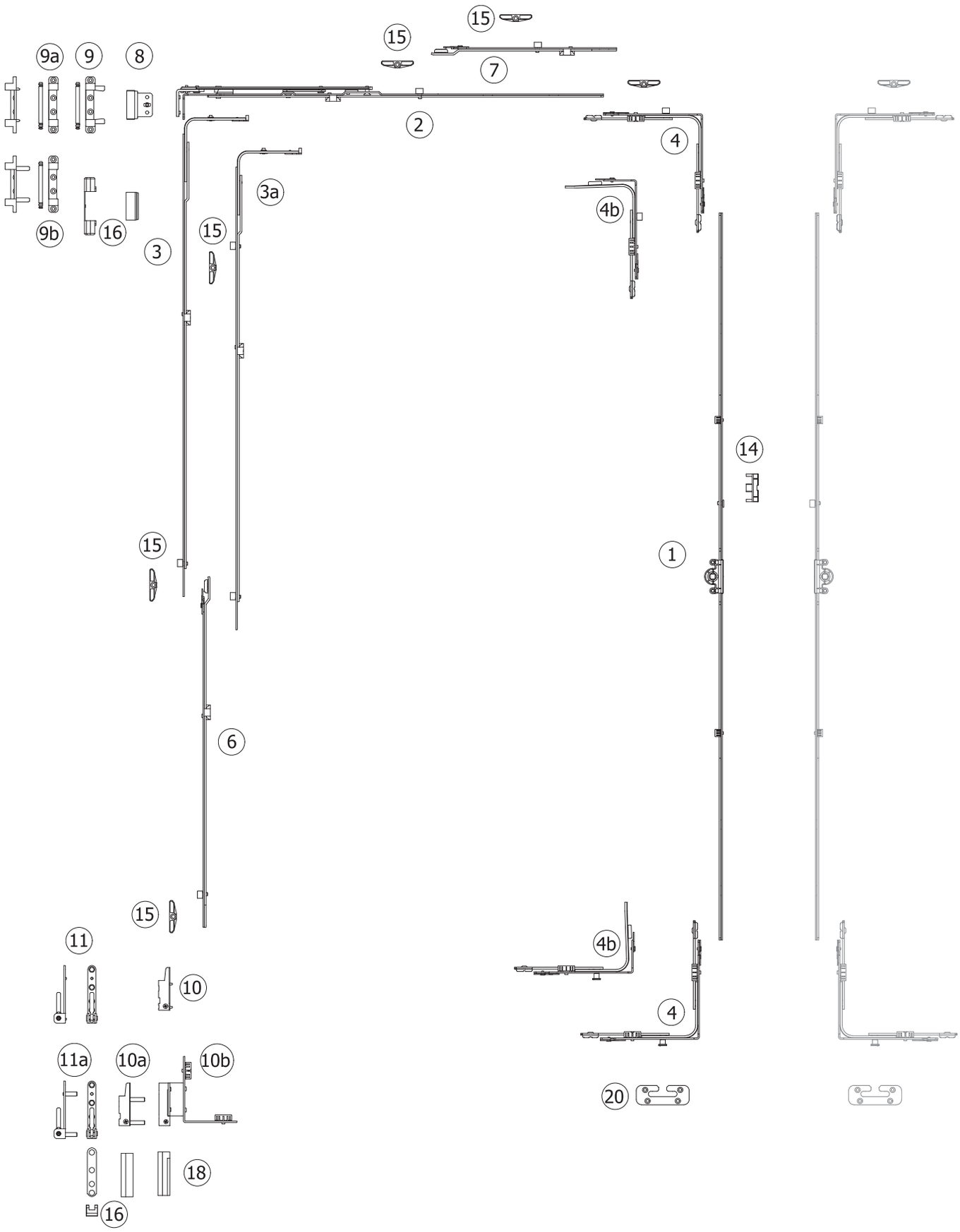

Double sash, double tilt and turn with 2 handles

1 - Tilt & Turn Gear Variable (without ML)

SRH	Article No
450 - 550	01.TTS100.00.00
550 - 700	01.TTS100.00.01
700 - 1200	01.TTS100.00.02
900 - 1400	01.TTS100.00.03
1200 - 1700	01.TTS100.00.04
1700 - 2200	01.TTS100.00.05
1900 - 2400	01.TTS100.00.06

2 - Stay arm

SRW	Article No
350 - 600	01.TTS210.00.01
400 - 650	01.TTS210.00.02
600 - 850	01.TTS210.01.03
850 - 1100	01.TTS210.01.04
1100 - 1350	01.TTS210.01.05

3 - Middle lock

SRH (SRW *)	Article No
450 - 700 *	01.TTS310.01.01
700 - 1200 *	01.TTS310.01.02
900 - 1400 *	01.TTS310.01.03
1200 - 1700 *	01.TTS310.01.04
1700 - 2200	01.TTS310.01.05
1900 - 2400	01.TTS310.01.06

3a - Middle lock (with additional ML)

SRH (SRW *)	Article No
450 - 700 *	01.TTS310.03.01
700 - 1200 *	01.TTS310.03.02
900 - 1400 *	01.TTS310.03.03
1200 - 1700 *	01.TTS310.03.04
1700 - 2200	01.TTS310.03.05
1900 - 2400	01.TTS310.03.06

4 -	Corner transmission 1 ML	01.TTS401.00.01
4b-	Short corner transmission	01.TTS401.01.01
6 -	Middle lock extension 500	01.TTS410.03.00 **
7 -	Extension lock L=250	01.TTS410.01.00
	Extension lock L=500	01.TTS410.02.00

8 - Top sash hinge

Fitting Axis	Article No
9 / 20	01.TTS403.01.00
13 / 20	01.TTS403.02.00
14 / 20	01.TTS403.04.00

9 -	Stay arm bearing 100 kg ***	01.TTS405.00.00
9a -	Stay arm bearing 100 kg	01.TTS405.01.00
9b -	Stay arm bearing 130 kg	01.TTS405.02.00
10 -	Drill-in corner hinge 100 kg	01.TTS404.00.00
10a -	Drill-in corner hinge 130 kg	01.TTS404.01.00
10b -	Rebate corner hinge 13 mm, left	01.TTS600.L1.00
	Rebate corner hinge 9 mm, left	01.TTS600.L2.00
	Rebate corner hinge 13mm, right	01.TTS600.R1.00
	Rebate corner hinge 9 mm, right	01.TTS600.R2.00
11 -	Corner bearing 100 kg	01.TTS406.00.00
11a -	Corner bearing 130 kg	01.TTS406.01.00
15 -	Standard locking plate	see page 91
16 -	Hinge cover set	01.TTS408.00.****
18 -	Rebate hinge cover	01.TTS408.L1.****
		01.TTS408.R1.****
19 -	Locking plate Se	see page 91
20 -	Tilt locking plate Se	see page 91

* Only for horizontal use
** For Middle lock 04, 05 and 06
*** With anchorage
**** See page 6 - 7

Tilt & turn, Pitched window, Variable Handle Position

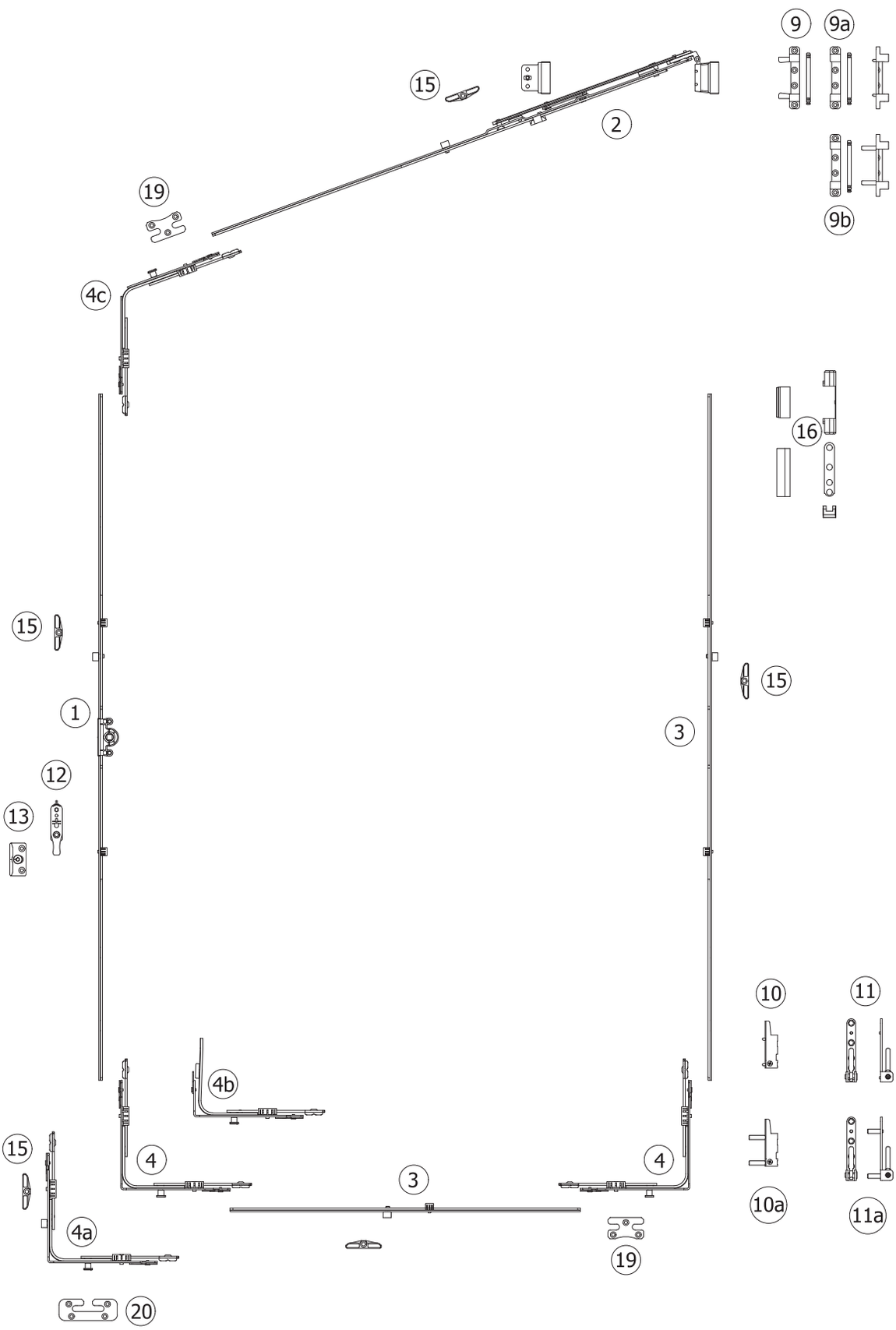

Tilt & turn, Pitched window, Variable Handle Position

1 - Tilt & Turn Gear Variable (15 mm backset)

SRH	Article No
450 - 550	01.TTS100.00.00
550 - 700	01.TTS100.00.01
700 - 1200	01.TTS100.01.02
900 - 1400	01.TTS100.01.03
1200 - 1700	01.TTS100.01.04
1700 - 2200	01.TTS100.01.05
1900 - 2400	01.TTS100.01.06

2 - Stay arm for oblique window

SRW	Article No
350 - 600	01.TTS202.L1/R1.00
400 - 650	01.TTS202.L2/R2.00
600 - 850	01.TTS202.L3/R3.00
850 - 1100	01.TTS202.L4/R4.00
1100 - 1350	01.TTS202.L5/R5.00

3 - Middle connection lock

SRH (SRW *)	Article No
450 - 550 *	01.TTS410.07.00
550 - 700 *	01.TTS410.08.00
700 - 1200 *	01.TTS410.09.00
900 - 1400	01.TTS410.10.00
1200 - 1700	01.TTS410.11.00
1700 - 2200	01.TTS410.12.00

4 -	Corner transmission 1 SeML	01.TTS401.00.02
4a-	Corner transmission 2 SeML	01.TTS401.00.22
4b-	Short corner transmission Se	01.TTS401.01.02
4c-	Corner transmission with for pitched window	01.TTS401.02.00

9 -	Stay arm bearing 100 kg ***	01.TTS405.00.00
9a -	Stay arm bearing 100 kg	01.TTS405.01.00
9b -	Stay arm bearing 130 kg	01.TTS405.02.00
10 -	Drill-in corner hinge 100 kg	01.TTS404.00.00
10a -	Drill-in corner hinge 130 kg	01.TTS404.01.00
11 -	Corner bearing 100 kg	01.TTS406.00.00
11a -	Corner bearing 130 kg	01.TTS406.01.00
12 -	Wrong op. safety device with sash lifter	01.TTS409.00.00
13 -	Lifting plate	see page 91
15 -	Standard locking plate	see page 91
16 -	Hinge cover set	01.TTS408.00.****
19 -	Locking plate Se	see page 91
20 -	Tilt locking plate Se	see page 91

* Only for horizontal use
** For Middle lock 04, 05 and 06
*** With anchorage
**** See page 6 - 7

Tilt & turn, Arched window, Variable Handle Position

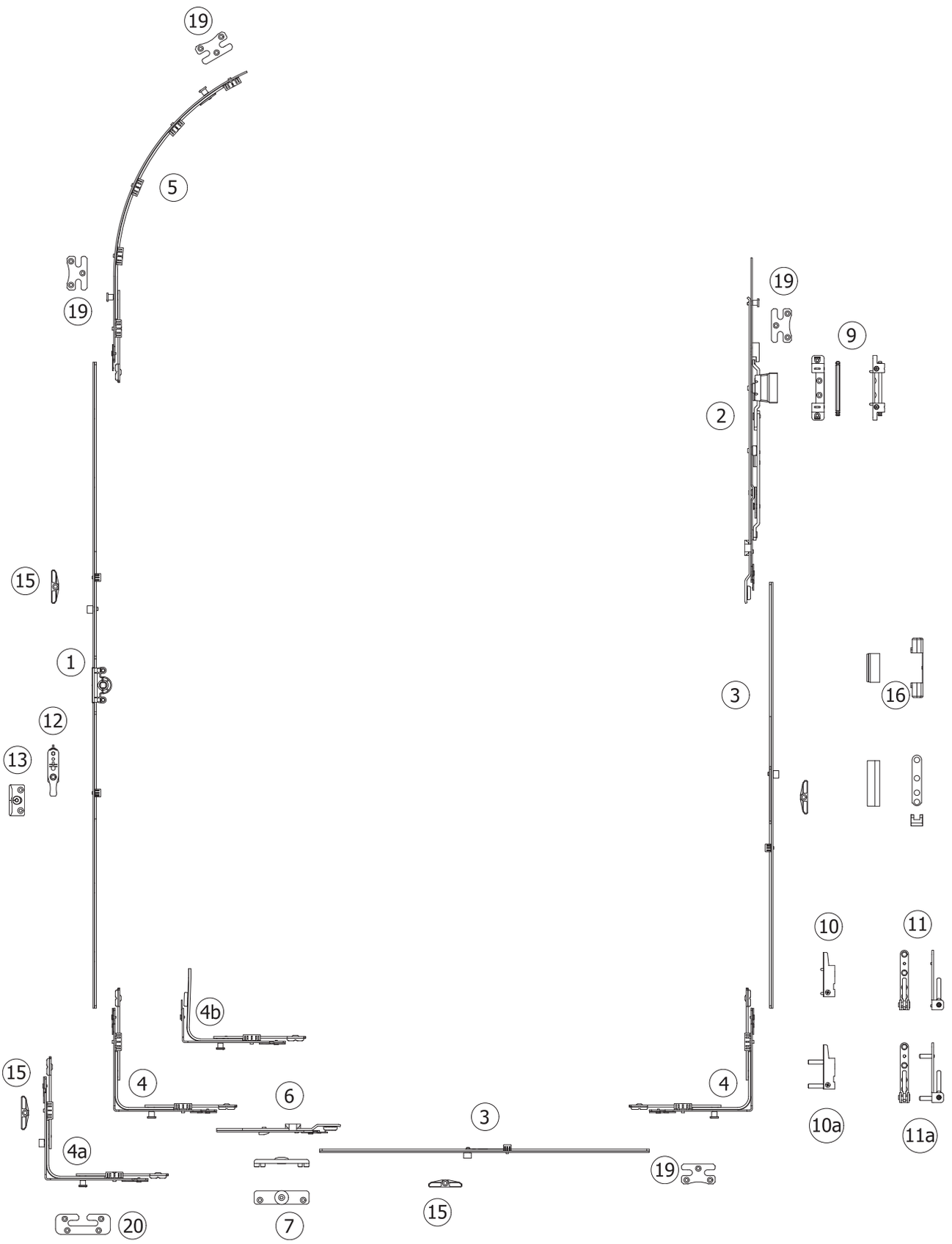

Tilt & turn, Arched window, Variable Handle Position

1 - Tilt & Turn Gear Variable (15 mm backset)

SRH	Article No
450 - 550	01.TTS100.00.00
550 - 700	01.TTS100.00.01
700 - 1200	01.TTS100.01.02
900 - 1400	01.TTS100.01.03
1200 - 1700	01.TTS100.01.04

2 -	Stay arm for arched window 9 left	01.TTS403.L1.00
	Stay arm for arched window 9 right	01.TTS403.R1.00
	Stay arm for arched window 13 left	01.TTS403.L2.00
	Stay arm for arched window 13 right	01.TTS403.R2.00

3 - Middle connection lock

SRH (SRW *)	Article No
450 - 550 *	01.TTS410.07.00
550 - 700 *	01.TTS410.08.00
700 - 1200 *	01.TTS410.09.00
900 - 1400	01.TTS410.10.00
1200 - 1700	01.TTS410.11.00

4 -	Corner transmission 1 SeML	01.TTS401.00.02
4a-	Corner transmission 2 SeML	01.TTS401.00.22
4b-	Short corner transmission Se	01.TTS401.01.02

5 -	Extension lock for arched window	01.TTS410.04.00

6 - Sash positioning extension

7 - Sash positioning plate

9 -	Stay arm bearing for arched	01.TTS405.02.00

10 -	Drill-in corner hinge 100 kg	01.TTS404.00.00
10a -	Drill-in corner hinge 130 kg	01.TTS404.01.00

11 -	Corner bearing 100 kg	01.TTS406.00.00
11a -	Corner bearing 130 kg	01.TTS406.01.00

12 -	Wrong op. safety device with sash lifter	01.TTS409.00.00

13 -	Lifting plate	see page 91

15 -	Standard locking plate	see page 91

16 -	Hinge cover set for arched	01.TTS408.00.****

19 -	Locking plate Se	see page 91

20 -	Tilt locking plate Se	see page 91

* Only for horizontal use
** For Middle lock 04, 05 and 06
*** With anchorage
**** See page 6 - 7

Bottom hung, Variable Handle Position

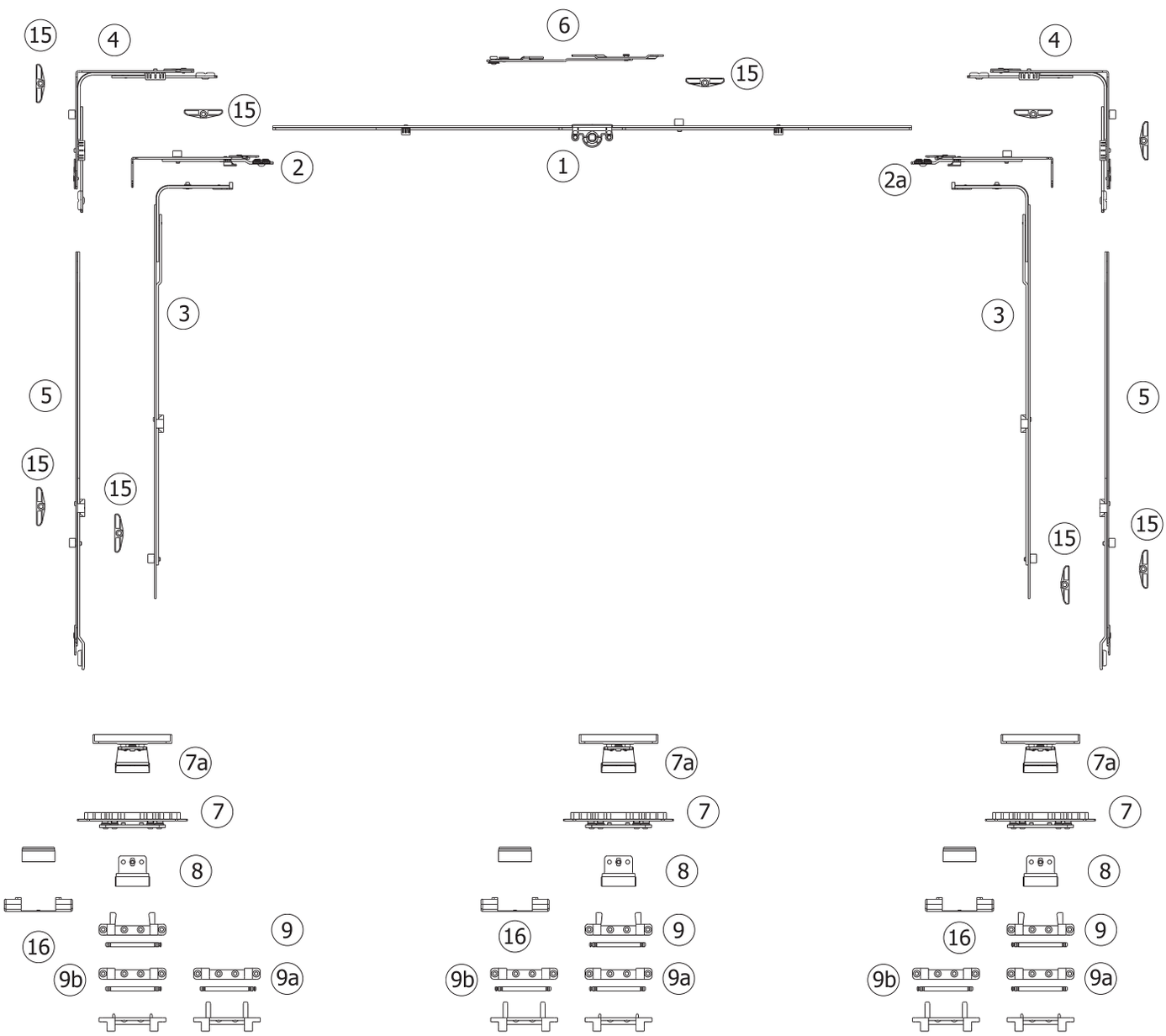

* Only for horizontal use
** For Middle lock 04, 05 and 06
*** With anchorage
**** See page 6 - 7

Bottom hung, Variable Handle Position



1 - Tilt & Turn Gear Variable (15 mm backset)

SRW	Article No
450 - 550	01.TTS100.00.00
550 - 700	01.TTS100.00.01
700 - 1200	01.TTS100.01.02
900 - 1400	01.TTS100.01.03
1200 - 1700	01.TTS100.01.04

2 -	Bottom extension 180°	01.TTS402.21.00
2a -	Bottom extension 90°	01.TTS402.22.00

3 - Middle lock

SRH	Article No
450 - 700	01.TTS310.01.01
700 - 1200	01.TTS310.01.02
900 - 1400	01.TTS310.01.03
1200 - 1700	01.TTS310.01.04

4 -	Corner transmission 1 ML	01.TTS401.00.01
5 -	Extension lock L=250	01.TTS410.01.00
	Extension lock L=500	01.TTS410.02.00
6 -	Tilt stay arm	01.VVV007.00.00
7 -	3D Adjustable middle hinge	01.TTS600.01.00
7a-	2D Adjustable middle hinge 9 mm	01.TTS600.09.00
	13 mm	01.TTS600.13.00

8 - Top sash hinge

Fitting Axis	Article No
9 / 20	01.TTS403.01.00
13 / 20	01.TTS403.02.00
14 / 20	01.TTS403.04.00

9 -	Stay arm bearing 100 kg ***	01.TTS405.00.00
9a -	Stay arm bearing 100 kg	01.TTS405.01.00
9b -	Stay arm bearing 130 kg	01.TTS405.02.00
15 -	Standard locking plate	see page 91
16 -	Middle hinge cover set	01.TTS408.01.****

Tilt & turn gear 15 mm backset, Variable Handle Position

Drilling and milling for tilt & turn gear 15 mm backset

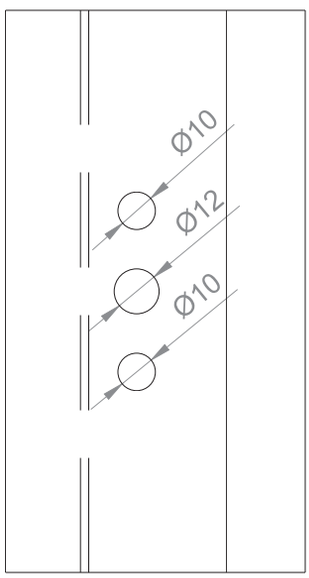

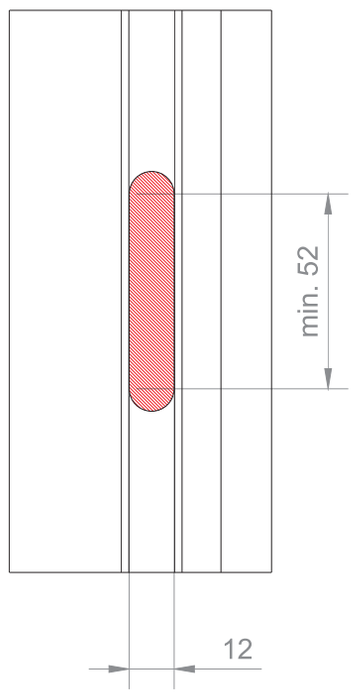

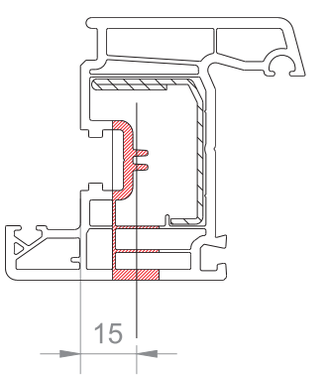

Tilt & turn gear 15 mm backset, Variable Handle Position

Tilt & turn gear 15 mm backset

ARTICLE NO	SRH	L	G	A	B	C		
01.TTS100.00.00	450 - 550	250	225 - 275	-	-	-	-	20
01.TTS100.00.01	550 - 700	400	275 - 350	-	-	-	2	20
01.TTS100.01.02	700 - 1200	900	350 - 600	111	-	-	3	20
01.TTS100.01.03	900 - 1400	1100	450 - 700	111	-	-	5	20
01.TTS100.01.04	1200 - 1700	1400	600 - 850	248	248	-	8	20
01.TTS100.01.05	1700 - 2200	1900	850 - 1100	350	350	-	8	20
01.TTS100.01.06	1900 - 2400	2100	950 - 1200	111	500	500	11	20

Tilt & turn gear Se 15 mm backset

ARTICLE NO	SRH	L	G	A	B	C		
01.TTS100.02.02	700 - 1200	900	350 - 600	111	-	-	3	20
01.TTS100.02.03	900 - 1400	1100	450 - 700	111	-	-	5	20
01.TTS100.02.04	1200 - 1700	1400	600 - 850	248	248	-	8	20
01.TTS100.02.05	1700 - 2200	1900	850 - 1100	350	350	-	8	20
01.TTS100.02.06	1900 - 2400	2100	950 - 1200	111	500	500	11	20

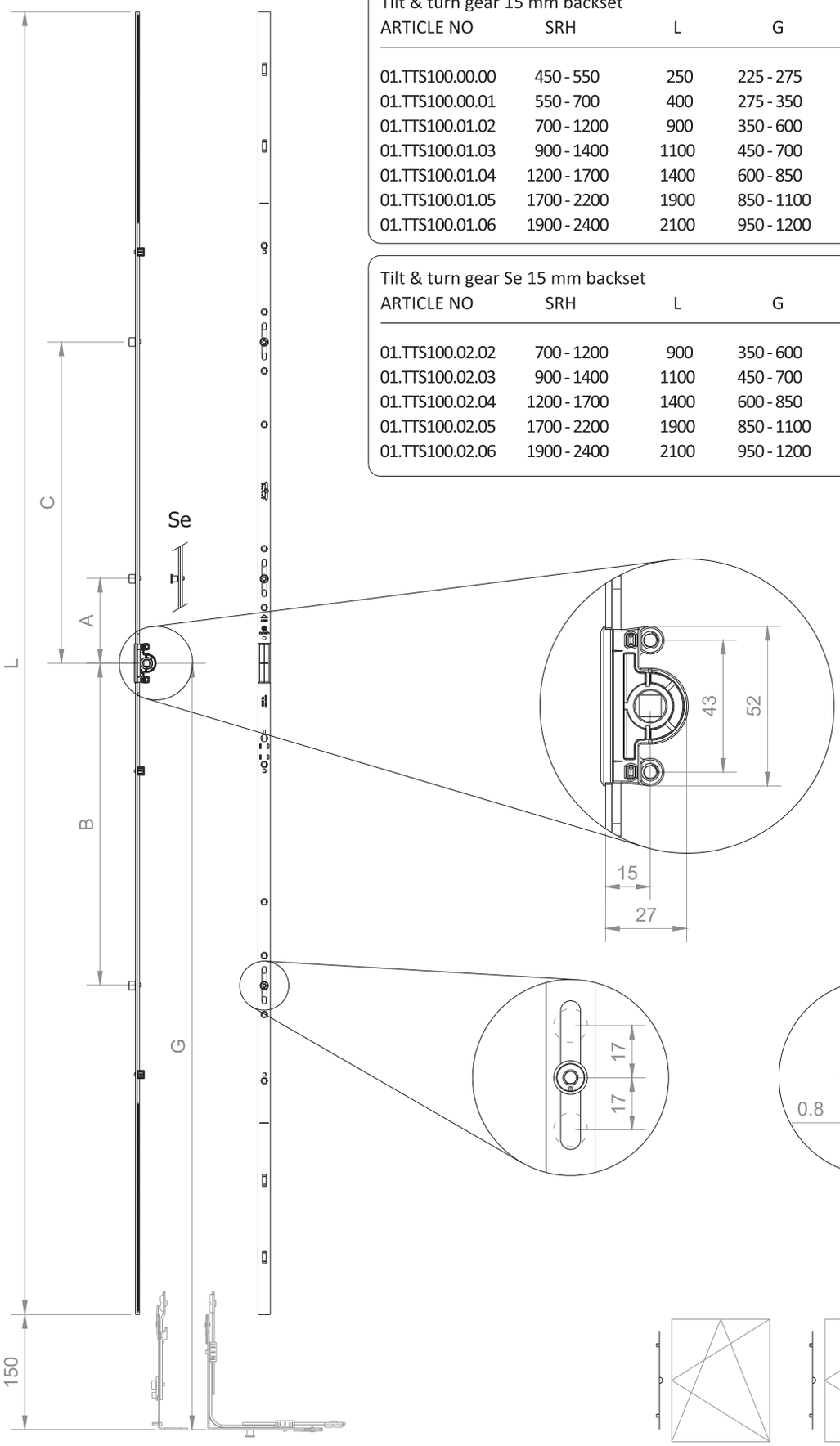

Tilt & turn gear 7,5 mm backset, Variable Handle Position

Drilling and milling for tilt & turn gear 7,5 mm backset

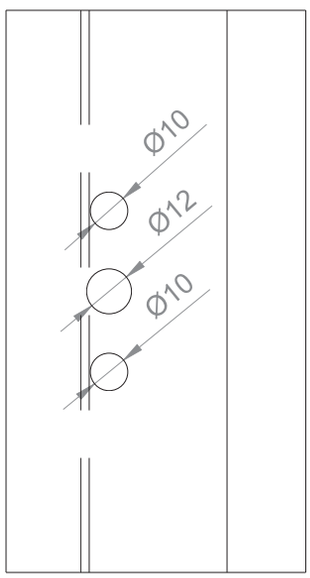

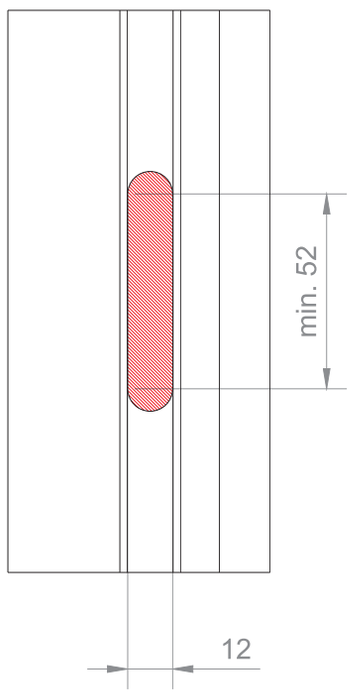

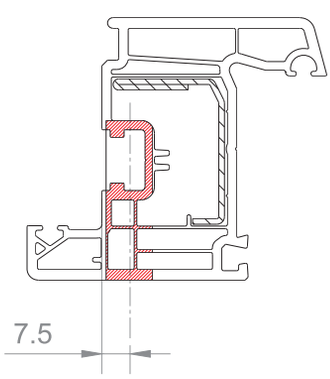

Tilt & turn gear 7,5 mm backset, Variable Handle Position

Tilt & turn gear 7,5 mm backset

ARTICLE NO	SRH	L	G	A	B	C		
01.TTS102.01.02	700 - 1200	900	350 - 600	111	-	-	3	20
01.TTS102.01.03	900 - 1400	1100	450 - 700	111	-	-	5	20
01.TTS102.01.04	1200 - 1700	1400	600 - 850	248	248	-	8	20
01.TTS102.01.05	1700 - 2200	1900	850 - 1100	350	350	-	8	20
01.TTS102.01.06	1900 - 2400	2100	950 - 1200	111	500	500	11	20

Tilt & turn gear Se 7,5 mm backset

ARTICLE NO	SRH	L	G	A	B	C		
01.TTS102.02.02	700 - 1200	900	350 - 600	111	-	-	3	20
01.TTS102.02.03	900 - 1400	1100	450 - 700	111	-	-	5	20
01.TTS102.02.04	1200 - 1700	1400	600 - 850	248	248	-	8	20
01.TTS102.02.05	1700 - 2200	1900	850 - 1100	350	350	-	8	20
01.TTS102.02.06	1900 - 2400	2100	950 - 1200	111	500	500	11	20

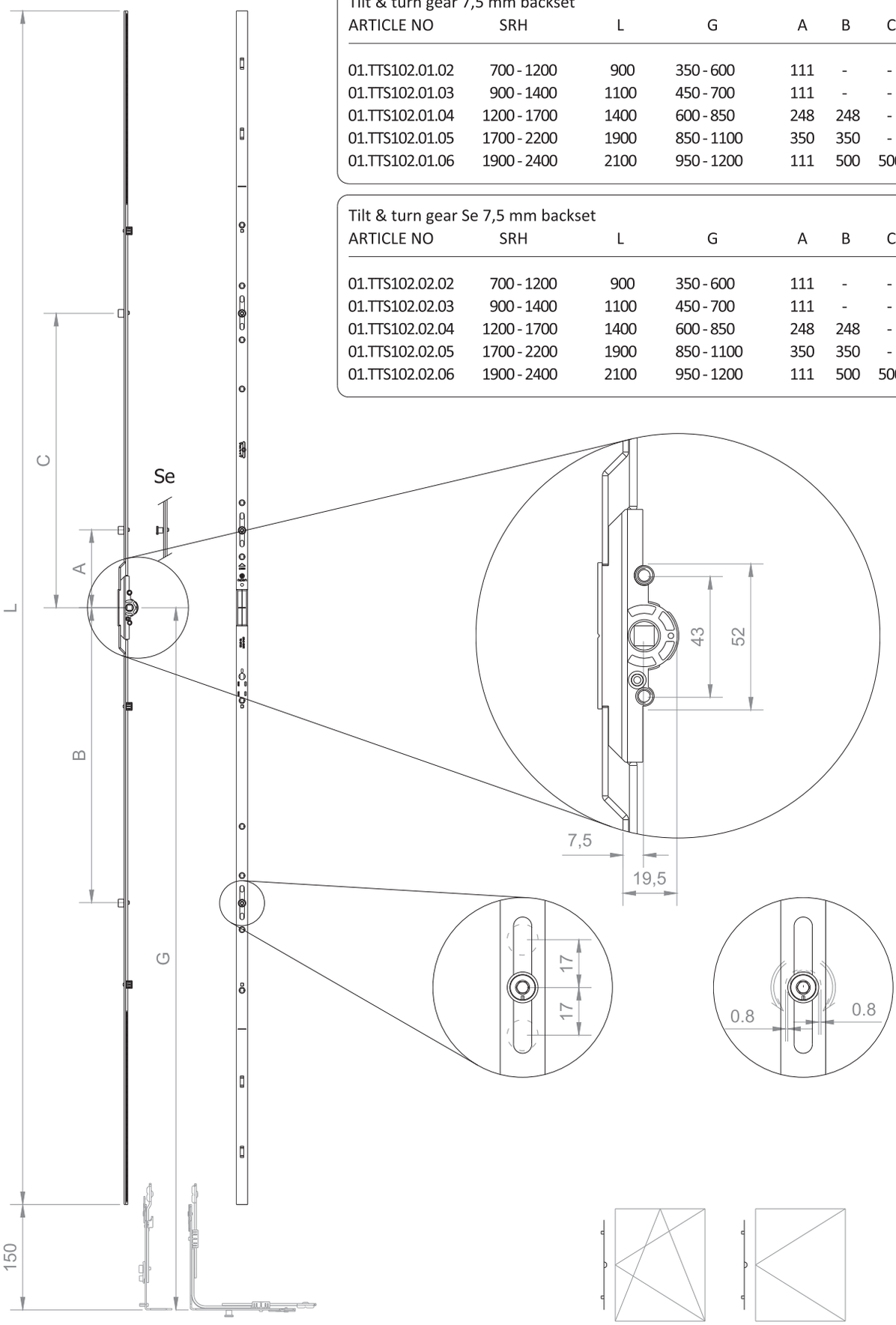

Tilt & turn gear 25 / 30 / 40 mm backset, Variable Handle Position

Drilling and milling for tilt & turn gear 25 / 30 / 40 mm backset

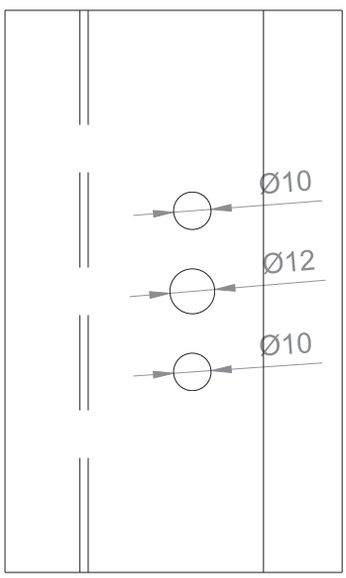

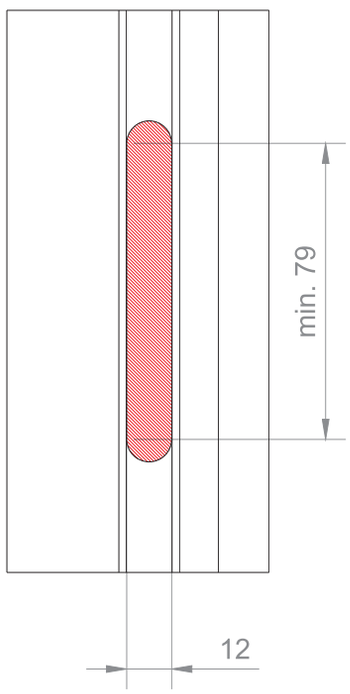

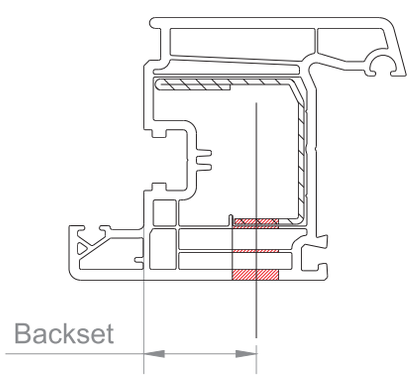

Tilt & turn gear 25 / 30 / 40 mm backset, Variable Handle Position

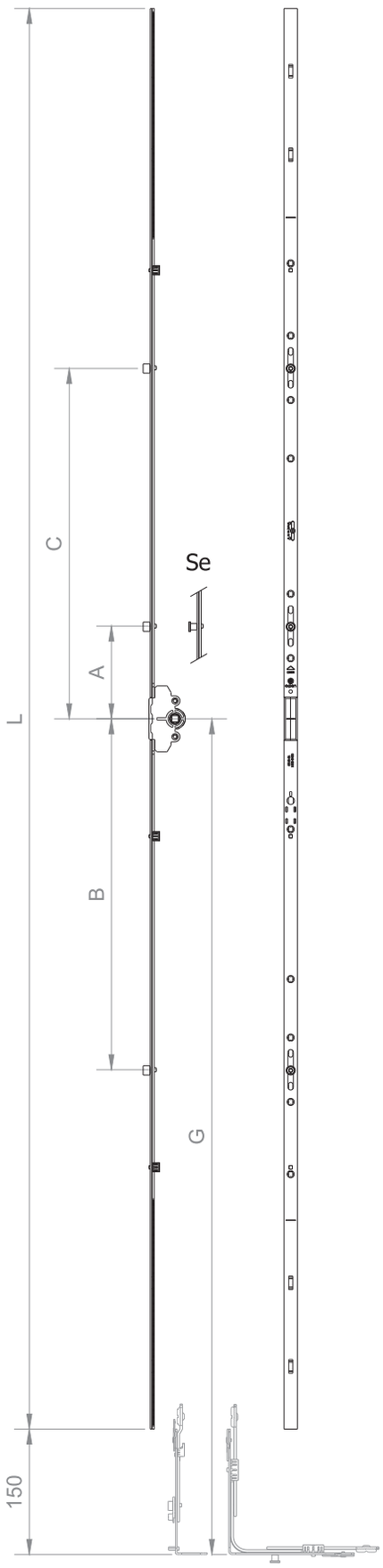

Tilt & turn gear 25 mm backset

ARTICLE NO	SRH	L	G	A	B	C		
01.TTS105.00.01	550 - 700	400	275 - 350	-	-	-	2	20
01.TTS105.01.02	700 - 1200	900	350 - 600	111	-	-	3	20
01.TTS105.01.03	900 - 1400	1100	450 - 700	111	-	-	5	20
01.TTS105.01.04	1200 - 1700	1400	600 - 850	248	248	-	8	20
01.TTS105.01.05	1700 - 2200	1900	850 - 1100	350	350	-	8	20
01.TTS105.01.06	1900 - 2400	2100	950 - 1200	111	500	500	11	20

Tilt & turn gear Se 25 mm backset

ARTICLE NO	SRH	L	G	A	B	C		
01.TTS105.02.02	700 - 1200	900	350 - 600	111	-	-	3	20
01.TTS105.02.03	900 - 1400	1100	450 - 700	111	-	-	5	20
01.TTS105.02.04	1200 - 1700	1400	600 - 850	248	248	-	8	20
01.TTS105.02.05	1700 - 2200	1900	850 - 1100	350	350	-	8	20
01.TTS105.02.06	1900 - 2400	2100	950 - 1200	111	500	500	11	20

Tilt & turn gear 30 mm backset

ARTICLE NO	SRH	L	G	A	B	C		
01.TTS102.00.01	550 - 700	400	275 - 350	-	-	-	2	20
01.TTS102.01.02	700 - 1200	900	350 - 600	111	-	-	3	20
01.TTS102.01.03	900 - 1400	1100	450 - 700	111	-	-	5	20
01.TTS102.01.04	1200 - 1700	1400	600 - 850	248	248	-	8	20
01.TTS102.01.05	1700 - 2200	1900	850 - 1100	350	350	-	8	20
01.TTS102.01.06	1900 - 2400	2100	950 - 1200	111	500	500	11	20

Tilt & turn gear Se 30 mm backset

ARTICLE NO	SRH	L	G	A	B	C		
01.TTS102.02.02	700 - 1200	900	350 - 600	111	-	-	3	20
01.TTS102.02.03	900 - 1400	1100	450 - 700	111	-	-	5	20
01.TTS102.02.04	1200 - 1700	1400	600 - 850	248	248	-	8	20
01.TTS102.02.05	1700 - 2200	1900	850 - 1100	350	350	-	8	20
01.TTS102.02.06	1900 - 2400	2100	950 - 1200	111	500	500	11	20

Tilt & turn gear 40 mm backset

ARTICLE NO	SRH	L	G	A	B	C		
01.TTS104.00.01	550 - 700	400	275 - 350	-	-	-	2	20
01.TTS104.01.02	700 - 1200	900	350 - 600	111	-	-	3	20
01.TTS104.01.03	900 - 1400	1100	450 - 700	111	-	-	5	20
01.TTS104.01.04	1200 - 1700	1400	600 - 850	248	248	-	8	20
01.TTS104.01.05	1700 - 2200	1900	850 - 1100	350	350	-	8	20
01.TTS104.01.06	1900 - 2400	2100	950 - 1200	111	500	500	11	20

Tilt & turn gear Se 40 mm backset

ARTICLE NO	SRH	L	G	A	B	C		
01.TTS104.02.02	700 - 1200	900	350 - 600	111	-	-	3	20
01.TTS104.02.03	900 - 1400	1100	450 - 700	111	-	-	5	20
01.TTS104.02.04	1200 - 1700	1400	600 - 850	248	248	-	8	20
01.TTS104.02.05	1700 - 2200	1900	850 - 1100	350	350	-	8	20
01.TTS104.02.06	1900 - 2400	2100	950 - 1200	111	500	500	11	20

Tilt & turn lockable gear 25 / 30 / 40 mm backset, Variable Handle Position

Drilling and milling for tilt & turn lockable gear 25 / 30 / 40 mm backset

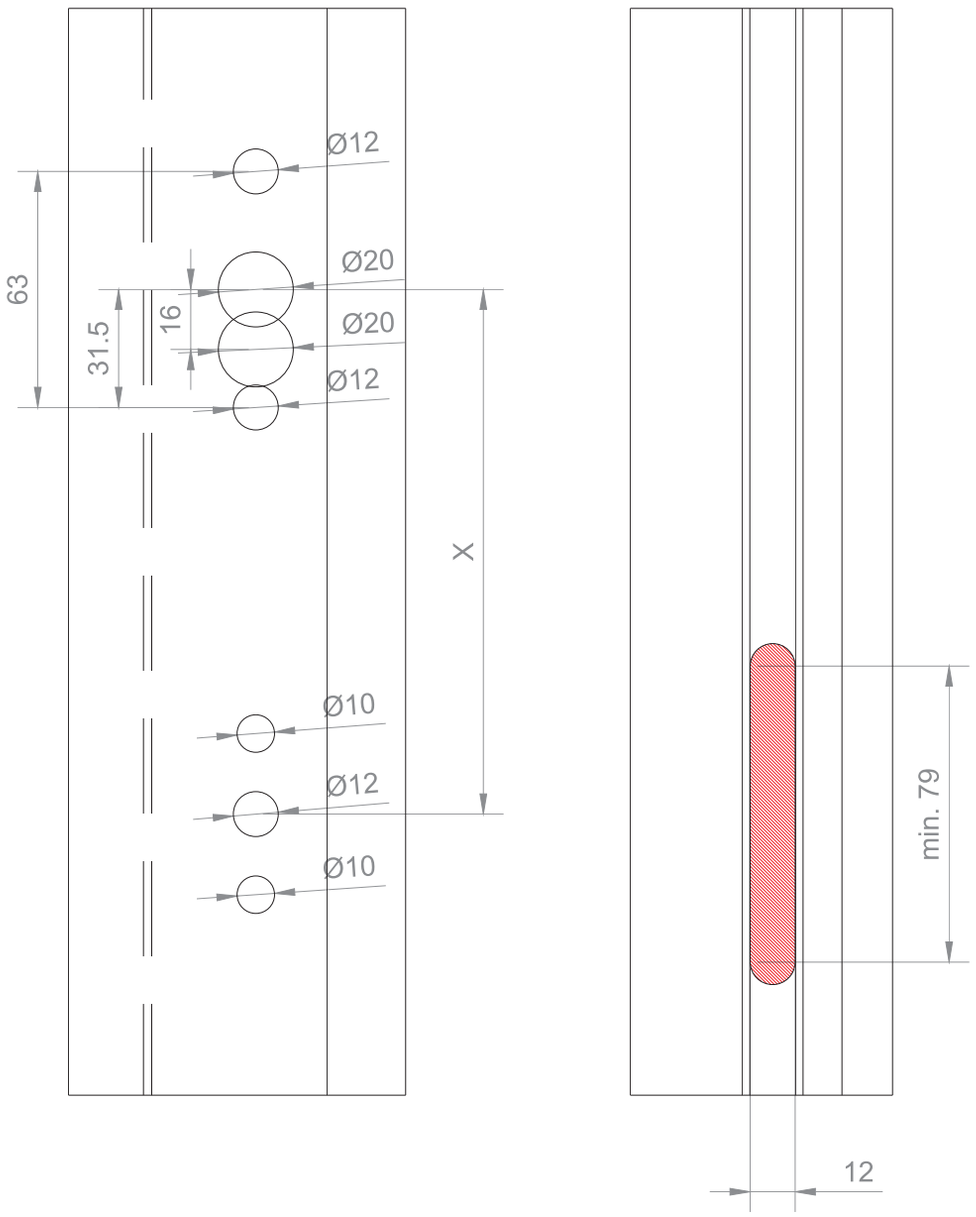

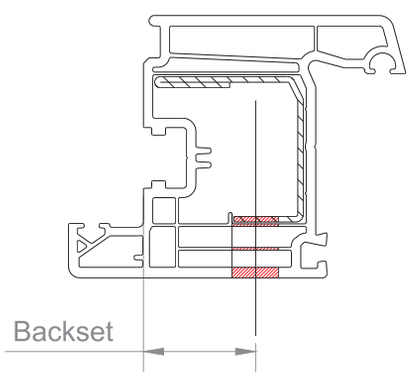

Tilt & turn lockable gear 25 / 30 / 40 mm backset, Variable Handle Position

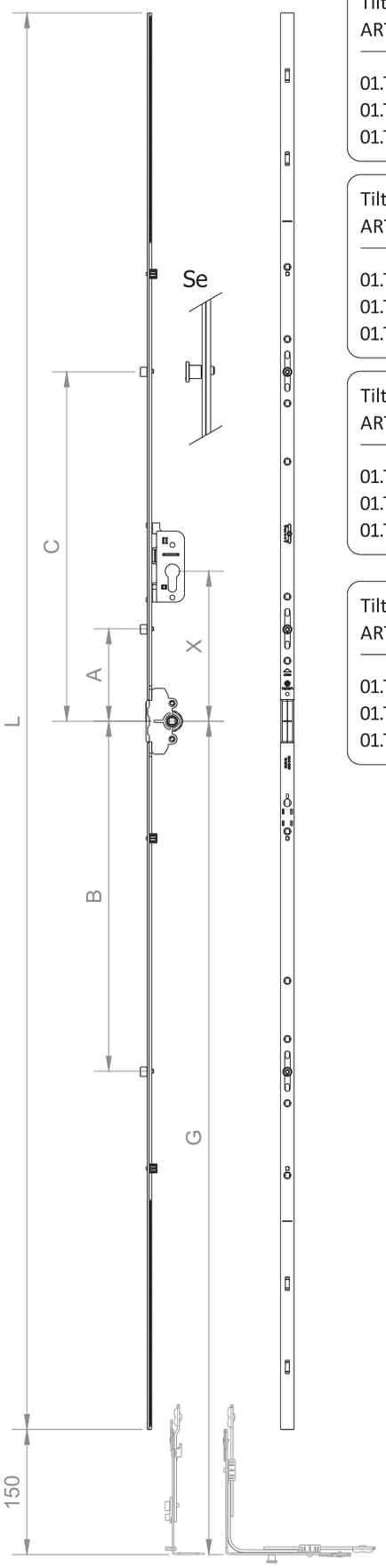

Tilt & turn gear 25 mm backset, lockable

ARTICLE NO	SRH	L	G	X	A	B	C		
01.TTS106.01.04	1200 - 1700	1400	600 - 850	140	248	248	-	8	20
01.TTS106.01.05	1700 - 2200	1900	850 - 1100	180	350	350	-	8	20
01.TTS106.01.06	1900 - 2400	2100	950 - 1200	180	111	500	500	11	20

Tilt & turn gear 25 mm backset, lockable

ARTICLE NO	SRH	L	G	X	A	B	C		
01.TTS106.02.04	1200 - 1700	1400	600 - 850	140	248	248	-	8	20
01.TTS106.02.05	1700 - 2200	1900	850 - 1100	180	350	350	-	8	20
01.TTS106.02.06	1900 - 2400	2100	950 - 1200	180	111	500	500	11	20

Tilt & turn gear 30 mm backset, lockable

ARTICLE NO	SRH	L	G	X	A	B	C		
01.TTS103.01.04	1200 - 1700	1400	600 - 850	140	248	248	-	8	20
01.TTS103.01.05	1700 - 2200	1900	850 - 1100	180	350	350	-	8	20
01.TTS103.01.06	1900 - 2400	2100	950 - 1200	180	111	500	500	11	20

Tilt & turn gear 30 mm backset, lockable

ARTICLE NO	SRH	L	G	X	A	B	C		
01.TTS103.02.04	1200 - 1700	1400	600 - 850	140	248	248	-	8	20
01.TTS103.02.05	1700 - 2200	1900	850 - 1100	180	350	350	-	8	20
01.TTS103.02.06	1900 - 2400	2100	950 - 1200	180	111	500	500	11	20

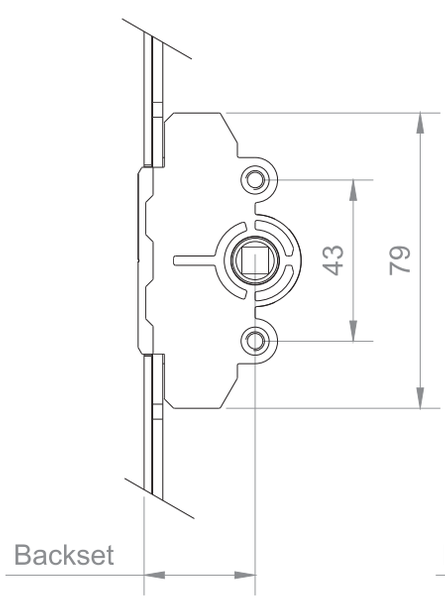

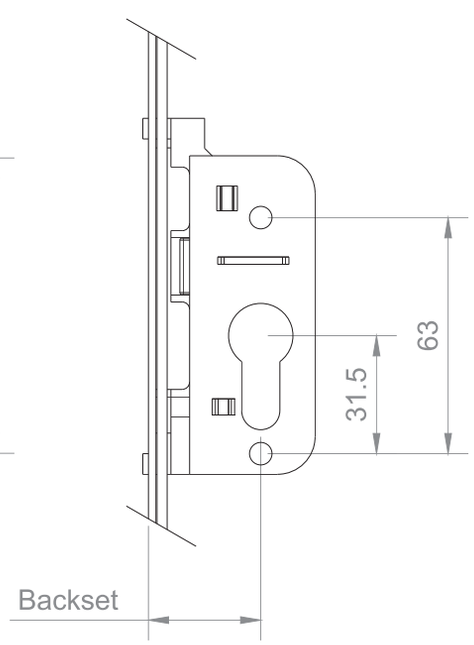

Side hung gear 15 mm backset, zinc gear box, Variable Handle Position

Side hung gear 15 mm backset, zinc gear box

ARTICLE NO	SRH	L	A	B	C	D		
01.TAI200.01.00	300 - 400	300	84	102	-	-	4	20
01.TAI200.02.00	400 - 600	400	134	152	-	-	4	20
01.TAI200.03.00	600 - 800	600	171	187	-	-	8	20
01.TAI200.04.00	800 - 1000	800	271	287	-	-	8	20
01.TAI200.05.00	1000 - 1200	1000	371	387	90	-	11	20
01.TAI200.06.00	1200 - 1400	1200	471	487	90	-	11	20
01.TAI200.07.00	1400 - 1600	1400	571	587	90	-	11	20
01.TAI200.08.00	1600 - 1800	1600	671	687	240	258	14	20
01.TAI200.09.00	1800 - 2000	1800	771	787	273	289	14	20
01.TAI200.10.00	2000 - 2200	2000	871	887	308	324	14	20

Side hung gear Se 15 mm backset, zinc gear box

ARTICLE NO	SRH	L	A	B	C	D		
01.TAI201.01.00	300 - 400	300	84	102	-	-	4	20
01.TAI201.02.00	400 - 600	400	134	152	-	-	4	20
01.TAI201.03.00	600 - 800	600	171	187	-	-	8	20
01.TAI201.04.00	800 - 1000	800	271	287	-	-	8	20
01.TAI201.05.00	1000 - 1200	1000	371	387	90	-	11	20
01.TAI201.06.00	1200 - 1400	1200	471	487	90	-	11	20
01.TAI201.07.00	1400 - 1600	1400	571	587	90	-	11	20
01.TAI201.08.00	1600 - 1800	1600	671	687	240	258	14	20
01.TAI201.09.00	1800 - 2000	1800	771	787	273	289	14	20
01.TAI201.10.00	2000 - 2200	2000	871	887	308	324	14	20

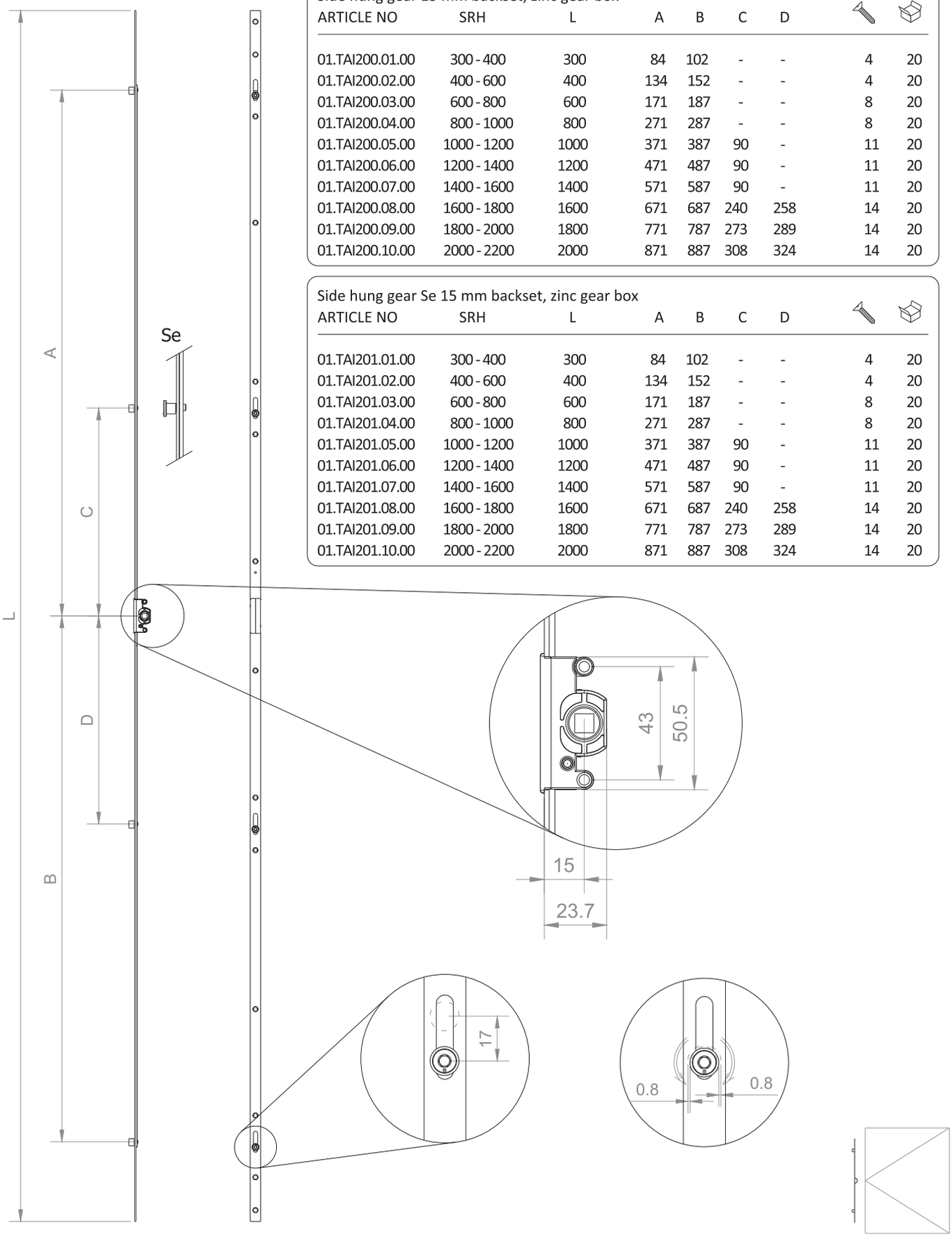

Side hung gear 7,5 mm backset, zinc gear box, Variable Handle Position

Side hung gear 7,5 mm backset, zinc gear box

ARTICLE NO	SRH	L	A	B	C	D		
01.TAI100.02.00	400 - 600	400	134	152	-	-	4	20
01.TAI100.03.00	600 - 800	600	171	187	-	-	8	20
01.TAI100.04.00	800 - 1000	800	271	287	-	-	8	20
01.TAI100.05.00	1000 - 1200	1000	371	387	90	-	11	20
01.TAI100.06.00	1200 - 1400	1200	471	487	90	-	11	20
01.TAI100.07.00	1400 - 1600	1400	571	587	90	-	11	20
01.TAI100.08.00	1600 - 1800	1600	671	687	240	258	14	20
01.TAI100.09.00	1800 - 2000	1800	771	787	273	289	14	20
01.TAI100.10.00	2000 - 2200	2000	871	887	308	324	14	20

Side hung gear Se 7,5 mm backset, zinc gear box

ARTICLE NO	SRH	L	A	B	C	D		
01.TAI101.02.00	400 - 600	400	134	152	-	-	4	20
01.TAI101.03.00	600 - 800	600	171	187	-	-	8	20
01.TAI101.04.00	800 - 1000	800	271	287	-	-	8	20
01.TAI101.05.00	1000 - 1200	1000	371	387	90	-	11	20
01.TAI101.06.00	1200 - 1400	1200	471	487	90	-	11	20
01.TAI101.07.00	1400 - 1600	1400	571	587	90	-	11	20
01.TAI101.08.00	1600 - 1800	1600	671	687	240	258	14	20
01.TAI101.09.00	1800 - 2000	1800	771	787	273	289	14	20
01.TAI101.10.00	2000 - 2200	2000	871	887	308	324	14	20

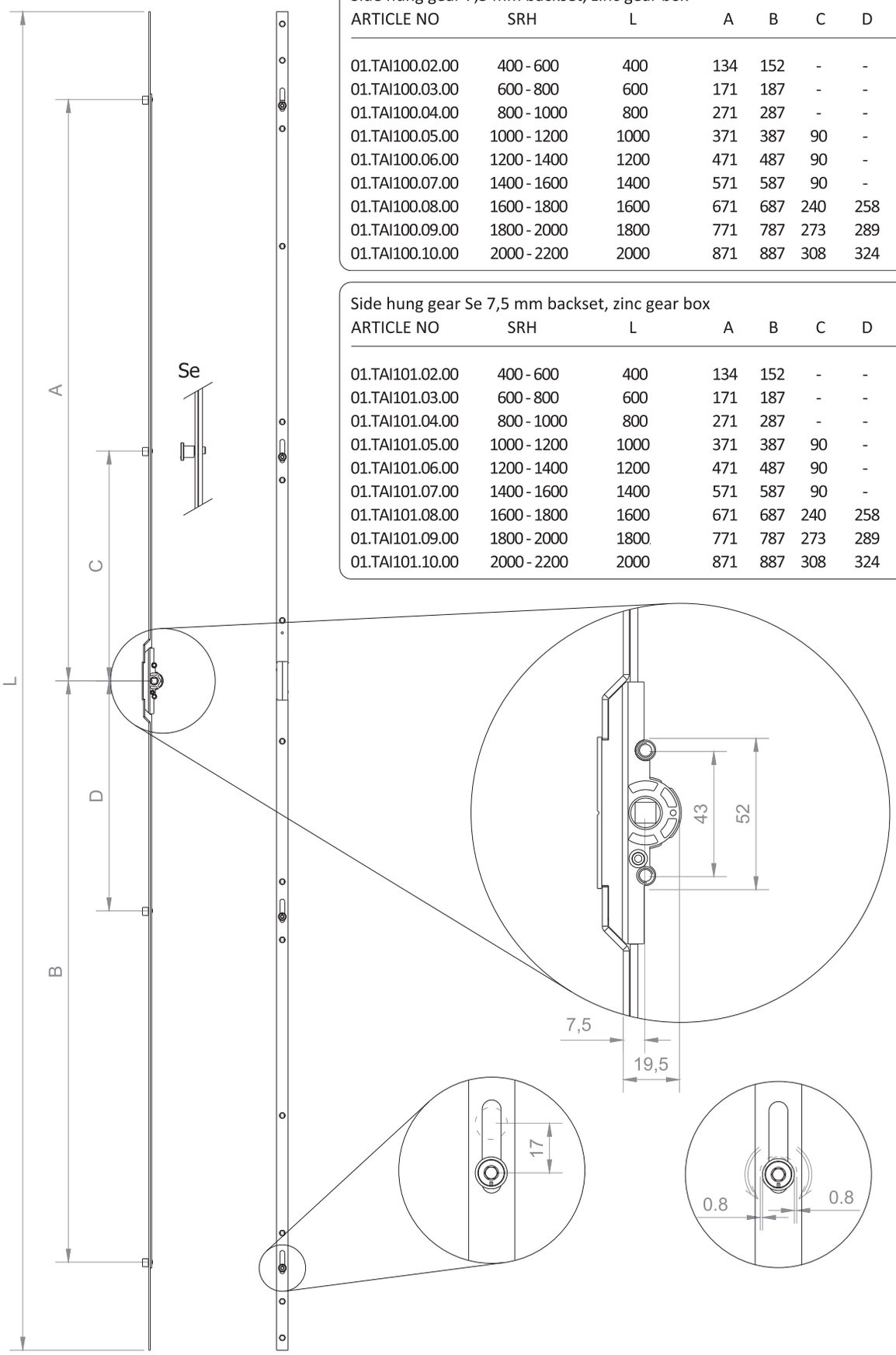

Side hung gear 20 mm backset, zinc gear box, Variable Handle Position

Side hung gear 20 mm backset, zinc gear box

ARTICLE NO	SRH	L	A	B	C	D		
01.TAI300.01.00	300 - 400	300	84	102	-	-	4	20
01.TAI300.02.00	400 - 600	400	134	152	-	-	4	20
01.TAI300.03.00	600 - 800	600	171	187	-	-	8	20
01.TAI300.04.00	800 - 1000	800	271	287	-	-	8	20
01.TAI300.05.00	1000 - 1200	1000	371	387	90	-	11	20
01.TAI300.06.00	1200 - 1400	1200	471	487	90	-	11	20
01.TAI300.07.00	1400 - 1600	1400	571	587	90	-	11	20
01.TAI300.08.00	1600 - 1800	1600	671	687	240	258	14	20
01.TAI300.09.00	1800 - 2000	1800	771	787	273	289	14	20
01.TAI300.10.00	2000 - 2200	2000	871	887	308	324	14	20

Side hung gear Se 20 mm backset, zinc gear box

ARTICLE NO	SRH	L	A	B	C	D		
01.TAI301.01.00	300 - 400	300	84	102	-	-	4	20
01.TAI301.02.00	400 - 600	400	134	152	-	-	4	20
01.TAI301.03.00	600 - 800	600	171	187	-	-	8	20
01.TAI301.04.00	800 - 1000	800	271	287	-	-	8	20
01.TAI301.05.00	1000 - 1200	1000	371	387	90	-	11	20
01.TAI301.06.00	1200 - 1400	1200	471	487	90	-	11	20
01.TAI301.07.00	1400 - 1600	1400	571	587	90	-	11	20
01.TAI301.08.00	1600 - 1800	1600	671	687	240	258	14	20
01.TAI301.09.00	1800 - 2000	1800	771	787	273	289	14	20
01.TAI301.10.00	2000 - 2200	2000	871	887	308	324	14	20

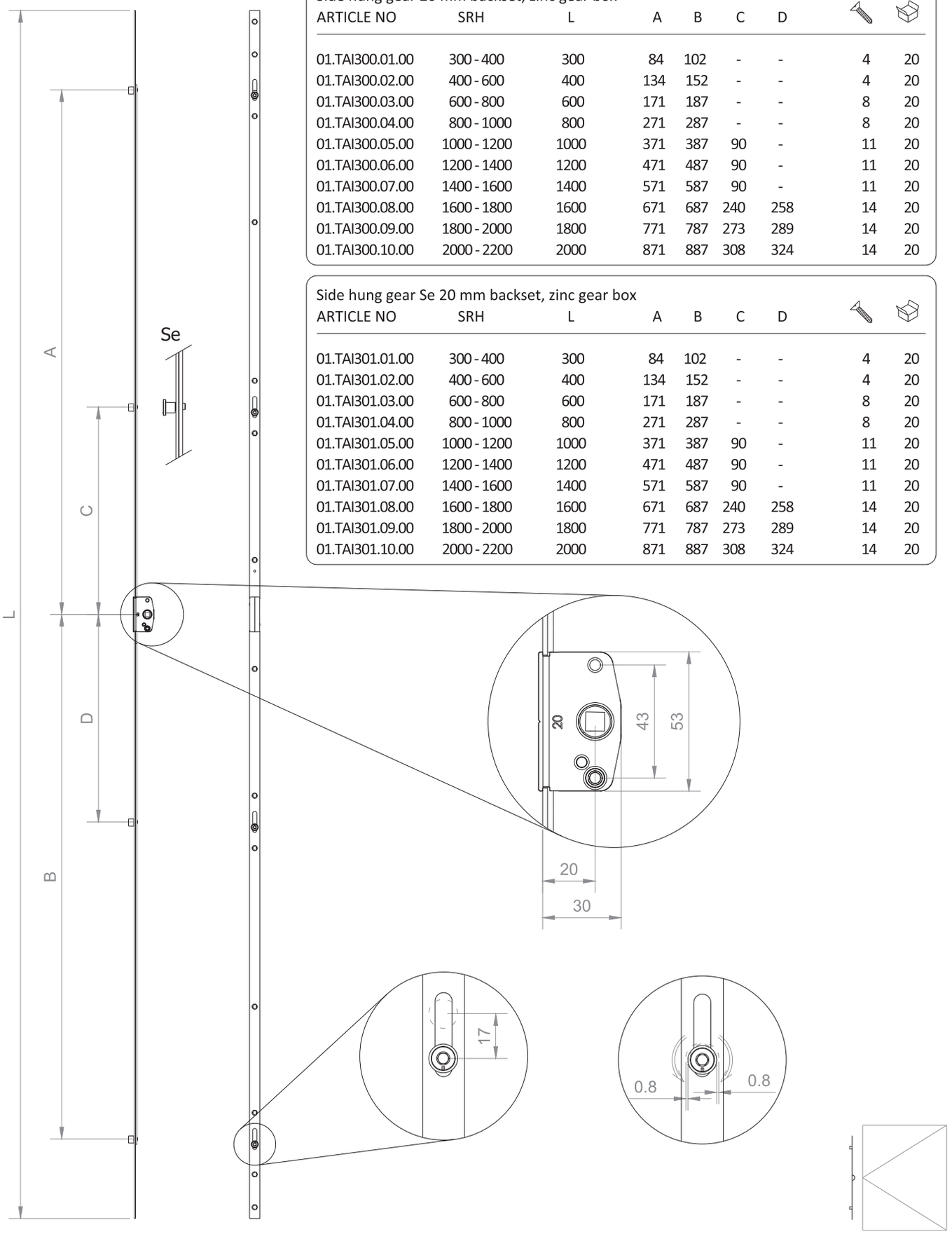

Side hung gear 22 mm backset, zinc gear box, Variable Handle Position

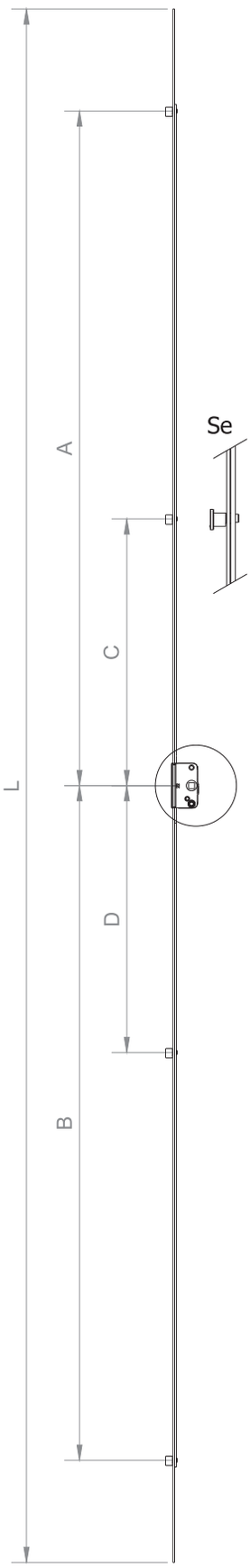

Side hung gear 22 mm backset, zinc gear box

ARTICLE NO	SRH	L	A	B	C	D		
01.TAI400.01.00	300 - 400	300	84	102	-	-	4	20
01.TAI400.02.00	400 - 600	400	134	152	-	-	4	20
01.TAI400.03.00	600 - 800	600	171	187	-	-	8	20
01.TAI400.04.00	800 - 1000	800	271	287	-	-	8	20
01.TAI400.05.00	1000 - 1200	1000	371	387	90	-	11	20
01.TAI400.06.00	1200 - 1400	1200	471	487	90	-	11	20
01.TAI400.07.00	1400 - 1600	1400	571	587	90	-	11	20
01.TAI400.08.00	1600 - 1800	1600	671	687	240	258	14	20
01.TAI400.09.00	1800 - 2000	1800	771	787	273	289	14	20
01.TAI400.10.00	2000 - 2200	2000	871	887	308	324	14	20

Side hung gear Se 22 mm backset, zinc gear box

ARTICLE NO	SRH	L	A	B	C	D		
01.TAI401.01.00	300 - 400	300	84	102	-	-	4	20
01.TAI401.02.00	400 - 600	400	134	152	-	-	4	20
01.TAI401.03.00	600 - 800	600	171	187	-	-	8	20
01.TAI401.04.00	800 - 1000	800	271	287	-	-	8	20
01.TAI401.05.00	1000 - 1200	1000	371	387	90	-	11	20
01.TAI401.06.00	1200 - 1400	1200	471	487	90	-	11	20
01.TAI401.07.00	1400 - 1600	1400	571	587	90	-	11	20
01.TAI401.08.00	1600 - 1800	1600	671	687	240	258	14	20
01.TAI401.09.00	1800 - 2000	1800	771	787	273	289	14	20
01.TAI401.10.00	2000 - 2200	2000	871	887	308	324	14	20

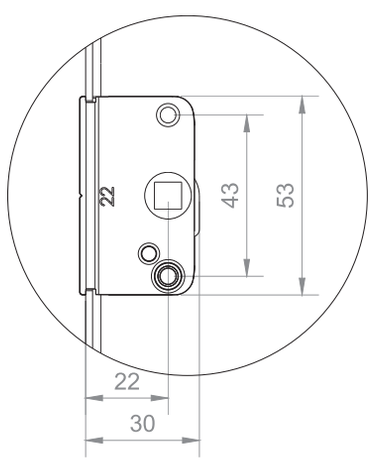

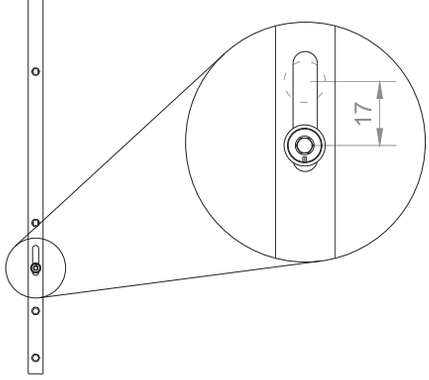

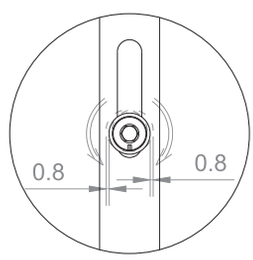

Side hung gear 25 mm backset, zinc gear box, Variable Handle Position

Side hung gear 25 mm backset, zinc gear box

ARTICLE NO	SRH	L	A	B	C	D		
01.TAI500.01.00	300 - 400	300	84	102	-	-	4	20
01.TAI500.02.00	400 - 600	400	134	152	-	-	4	20
01.TAI500.03.00	600 - 800	600	171	187	-	-	8	20
01.TAI500.04.00	800 - 1000	800	271	287	-	-	8	20
01.TAI500.05.00	1000 - 1200	1000	371	387	90	-	11	20
01.TAI500.06.00	1200 - 1400	1200	471	487	90	-	11	20
01.TAI500.07.00	1400 - 1600	1400	571	587	90	-	11	20
01.TAI500.08.00	1600 - 1800	1600	671	687	240	258	14	20
01.TAI500.09.00	1800 - 2000	1800	771	787	273	289	14	20
01.TAI500.10.00	2000 - 2200	2000	871	887	308	324	14	20

Side hung gear Se 25 mm backset, zinc gear box

ARTICLE NO	SRH	L	A	B	C	D		
01.TAI501.01.00	300 - 400	300	84	102	-	-	4	20
01.TAI501.02.00	400 - 600	400	134	152	-	-	4	20
01.TAI501.03.00	600 - 800	600	171	187	-	-	8	20
01.TAI501.04.00	800 - 1000	800	271	287	-	-	8	20
01.TAI501.05.00	1000 - 1200	1000	371	387	90	-	11	20
01.TAI501.06.00	1200 - 1400	1200	471	487	90	-	11	20
01.TAI501.07.00	1400 - 1600	1400	571	587	90	-	11	20
01.TAI501.08.00	1600 - 1800	1600	671	687	240	258	14	20
01.TAI501.09.00	1800 - 2000	1800	771	787	273	289	14	20
01.TAI501.10.00	2000 - 2200	2000	871	887	308	324	14	20

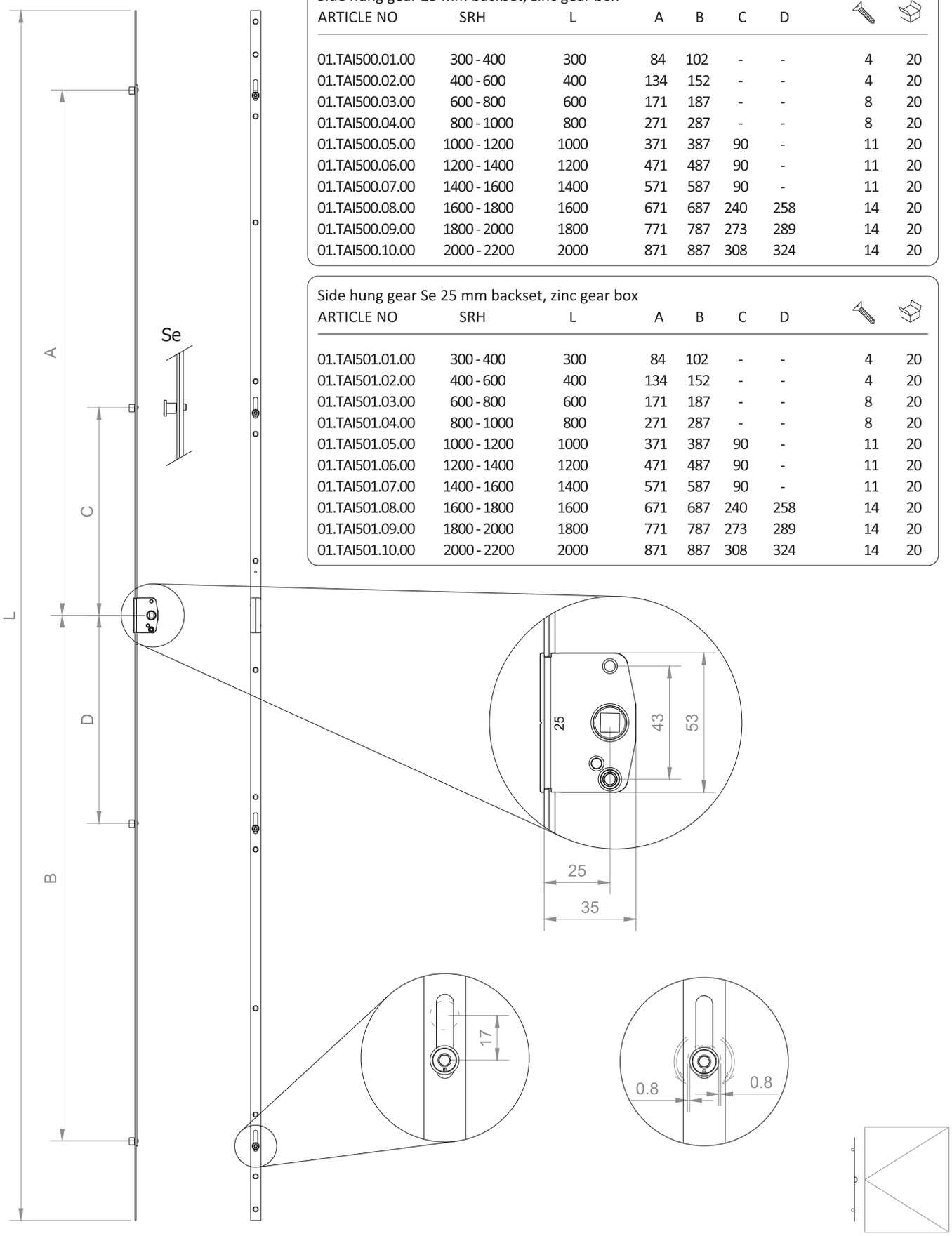

Side hung gear 30 mm backset, zinc gear box, Variable Handle Position

Side hung gear 30 mm backset, zinc gear box

ARTICLE NO	SRH	L	A	B	C	D		
01.TAI700.01.00	300 - 400	300	84	102	-	-	4	20
01.TAI700.02.00	400 - 600	400	134	152	-	-	4	20
01.TAI700.03.00	600 - 800	600	171	187	-	-	8	20
01.TAI700.04.00	800 - 1000	800	271	287	-	-	8	20
01.TAI700.05.00	1000 - 1200	1000	371	387	90	-	11	20
01.TAI700.06.00	1200 - 1400	1200	471	487	90	-	11	20
01.TAI700.07.00	1400 - 1600	1400	571	587	90	-	11	20
01.TAI700.08.00	1600 - 1800	1600	671	687	240	258	14	20
01.TAI700.09.00	1800 - 2000	1800	771	787	273	289	14	20
01.TAI700.10.00	2000 - 2200	2000	871	887	308	324	14	20

Side hung gear Se 30 mm backset, zinc gear box

ARTICLE NO	SRH	L	A	B	C	D		
01.TAI701.01.00	300 - 400	300	84	102	-	-	4	20
01.TAI701.02.00	400 - 600	400	134	152	-	-	4	20
01.TAI701.03.00	600 - 800	600	171	187	-	-	8	20
01.TAI701.04.00	800 - 1000	800	271	287	-	-	8	20
01.TAI701.05.00	1000 - 1200	1000	371	387	90	-	11	20
01.TAI701.06.00	1200 - 1400	1200	471	487	90	-	11	20
01.TAI701.07.00	1400 - 1600	1400	571	587	90	-	11	20
01.TAI701.08.00	1600 - 1800	1600	671	687	240	258	14	20
01.TAI701.09.00	1800 - 2000	1800	771	787	273	289	14	20
01.TAI701.10.00	2000 - 2200	2000	871	887	308	324	14	20

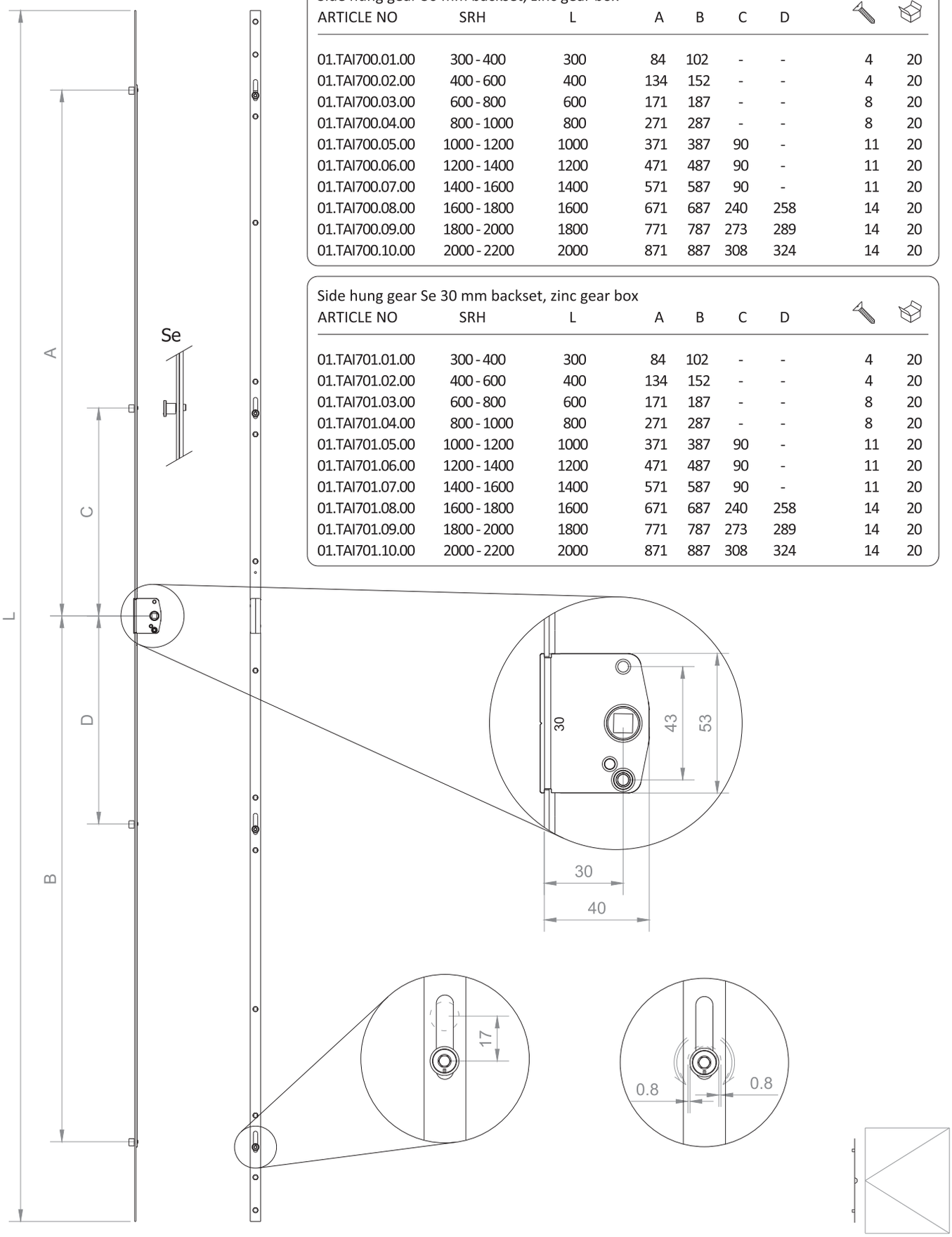

Side hung gear 40 mm backset, zinc gear box, Variable Handle Position

Side hung gear 40 mm backset, zinc gear box

ARTICLE NO	SRH	L	A	B	C	D		
01.TAI600.01.00	300 - 400	300	84	102	-	-	4	20
01.TAI600.02.00	400 - 600	400	134	152	-	-	4	20
01.TAI600.03.00	600 - 800	600	171	187	-	-	8	20
01.TAI600.04.00	800 - 1000	800	271	287	-	-	8	20
01.TAI600.05.00	1000 - 1200	1000	371	387	90	-	11	20
01.TAI600.06.00	1200 - 1400	1200	471	487	90	-	11	20
01.TAI600.07.00	1400 - 1600	1400	571	587	90	-	11	20
01.TAI600.08.00	1600 - 1800	1600	671	687	240	258	14	20
01.TAI600.09.00	1800 - 2000	1800	771	787	273	289	14	20
01.TAI600.10.00	2000 - 2200	2000	871	887	308	324	14	20

Side hung gear Se 40 mm backset, zinc gear box

ARTICLE NO	SRH	L	A	B	C	D		
01.TAI601.01.00	300 - 400	300	84	102	-	-	4	20
01.TAI601.02.00	400 - 600	400	134	152	-	-	4	20
01.TAI601.03.00	600 - 800	600	171	187	-	-	8	20
01.TAI601.04.00	800 - 1000	800	271	287	-	-	8	20
01.TAI601.05.00	1000 - 1200	1000	371	387	90	-	11	20
01.TAI601.06.00	1200 - 1400	1200	471	487	90	-	11	20
01.TAI601.07.00	1400 - 1600	1400	571	587	90	-	11	20
01.TAI601.08.00	1600 - 1800	1600	671	687	240	258	14	20
01.TAI601.09.00	1800 - 2000	1800	771	787	273	289	14	20
01.TAI601.10.00	2000 - 2200	2000	871	887	308	324	14	20

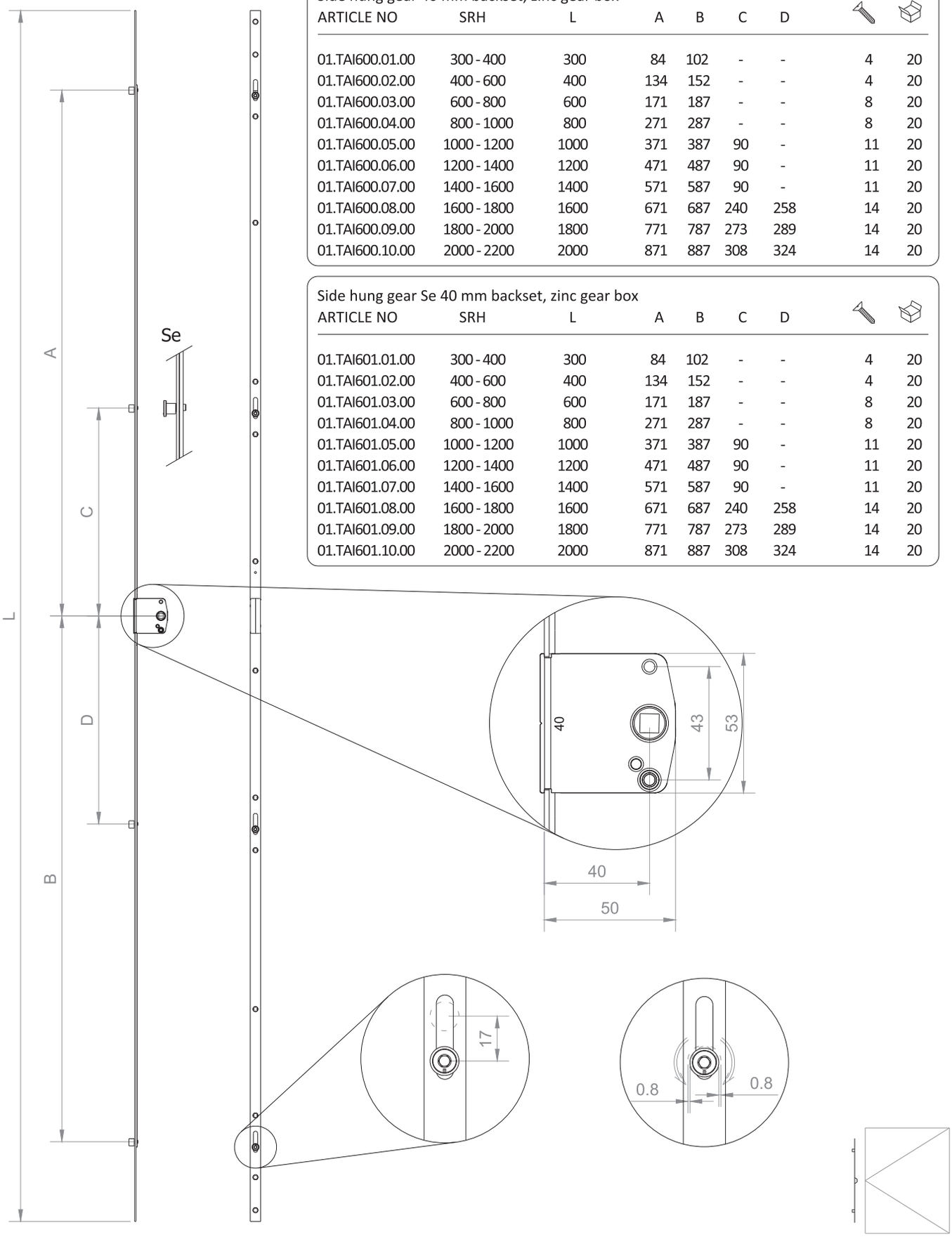

Side hung gear 15 mm backset, steel gear box, Variable Handle Position

Side hung gear 15 mm backset, steel gear box

ARTICLE NO	SRH	L	A	B	C	D		
01.TAI210.01.00	300 - 400	300	90	106	-	-	4	20
01.TAI210.02.00	400 - 600	400	134	152	-	-	4	20
01.TAI210.03.00	600 - 800	600	171	187	-	-	8	20
01.TAI210.04.00	800 - 1000	800	271	287	-	-	8	20
01.TAI210.05.00	1000 - 1200	1000	371	387	90	-	11	20
01.TAI210.06.00	1200 - 1400	1200	471	487	90	-	11	20
01.TAI210.07.00	1400 - 1600	1400	571	587	90	-	11	20
01.TAI210.08.00	1600 - 1800	1600	671	687	240	258	14	20
01.TAI210.09.00	1800 - 2000	1800	771	787	273	289	14	20
01.TAI210.10.00	2000 - 2200	2000	871	887	308	324	14	20

Side hung gear Se 15 mm backset, steel gear box

ARTICLE NO	SRH	L	A	B	C	D		
01.TAI211.01.00	300 - 400	300	90	106	-	-	4	20
01.TAI211.02.00	400 - 600	400	134	152	-	-	4	20
01.TAI211.03.00	600 - 800	600	171	187	-	-	8	20
01.TAI211.04.00	800 - 1000	800	271	287	-	-	8	20
01.TAI211.05.00	1000 - 1200	1000	371	387	90	-	11	20
01.TAI211.06.00	1200 - 1400	1200	471	487	90	-	11	20
01.TAI211.07.00	1400 - 1600	1400	571	587	90	-	11	20
01.TAI211.08.00	1600 - 1800	1600	671	687	240	258	14	20
01.TAI211.09.00	1800 - 2000	1800	771	787	273	289	14	20
01.TAI211.10.00	2000 - 2200	2000	871	887	308	324	14	20

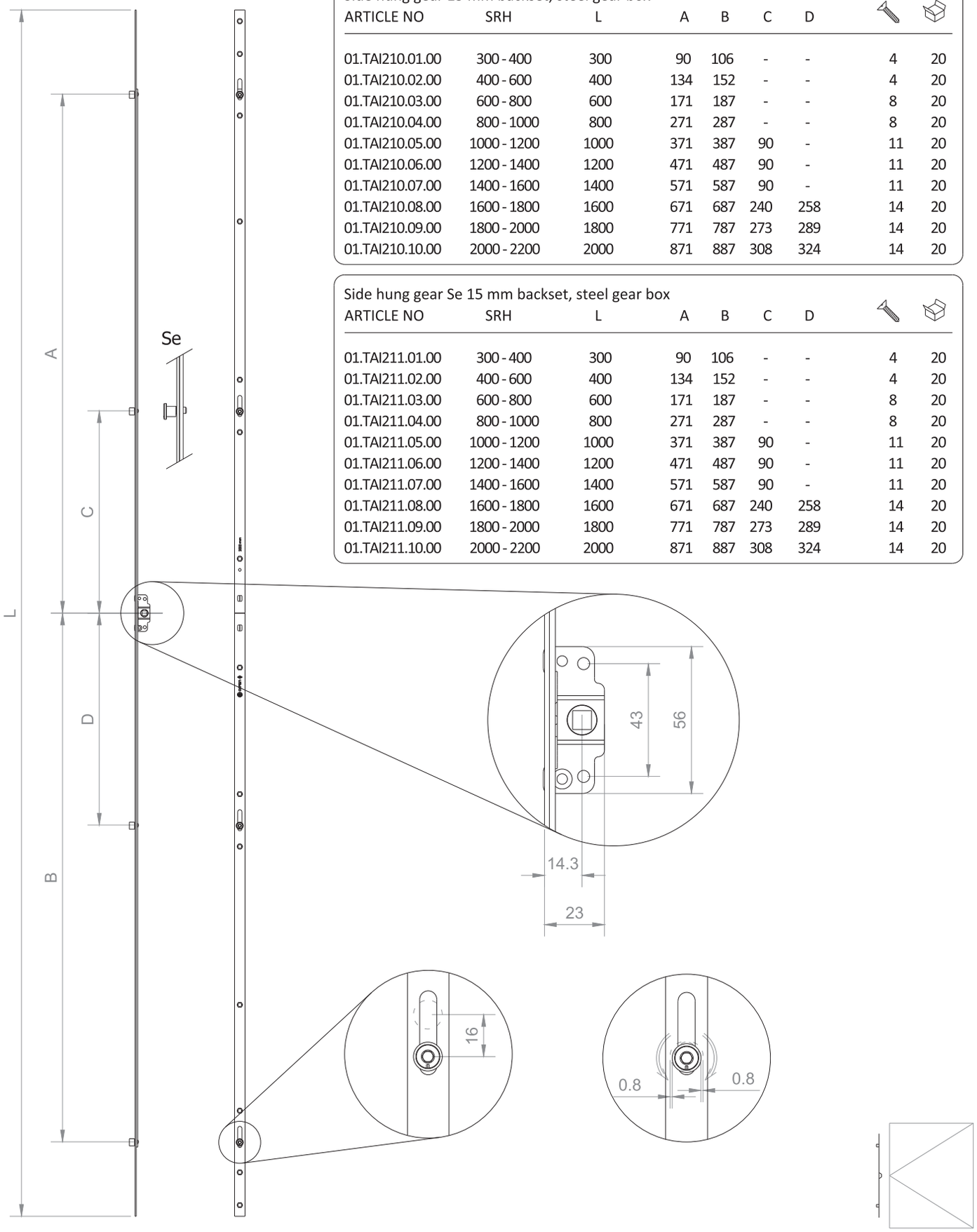

Double sash gear, Variable Handle Position

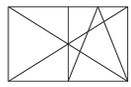

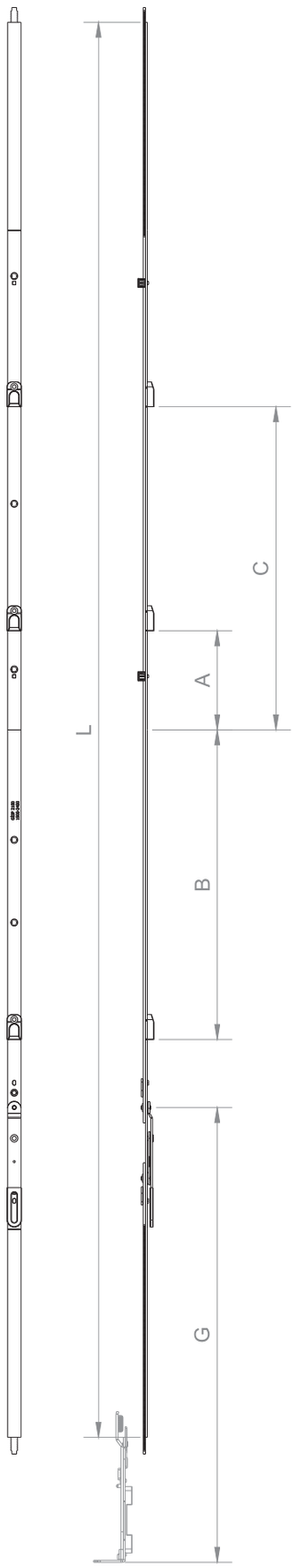

Double sash gear, variable handle position

ARTICLE NO	SRH	L	G	A	B	C		
01.TTS500.01.01	550 - 700	400	391	-	-	-	3	20
01.TTS500.01.02	700 - 1200	900	685	119	-	-	5	20
01.TTS500.01.03	900 - 1400	1100	755	119	-	-	6	20
01.TTS500.01.04	1200 - 1700	1400	549	256	240	-	8	20
01.TTS500.01.05	1700 - 2200	1900	549	358	342	-	9	20
01.TTS500.01.06	1900 - 2400	2100	549	119	492	508	11	20

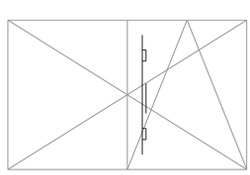

Double sash gear for lockable doors

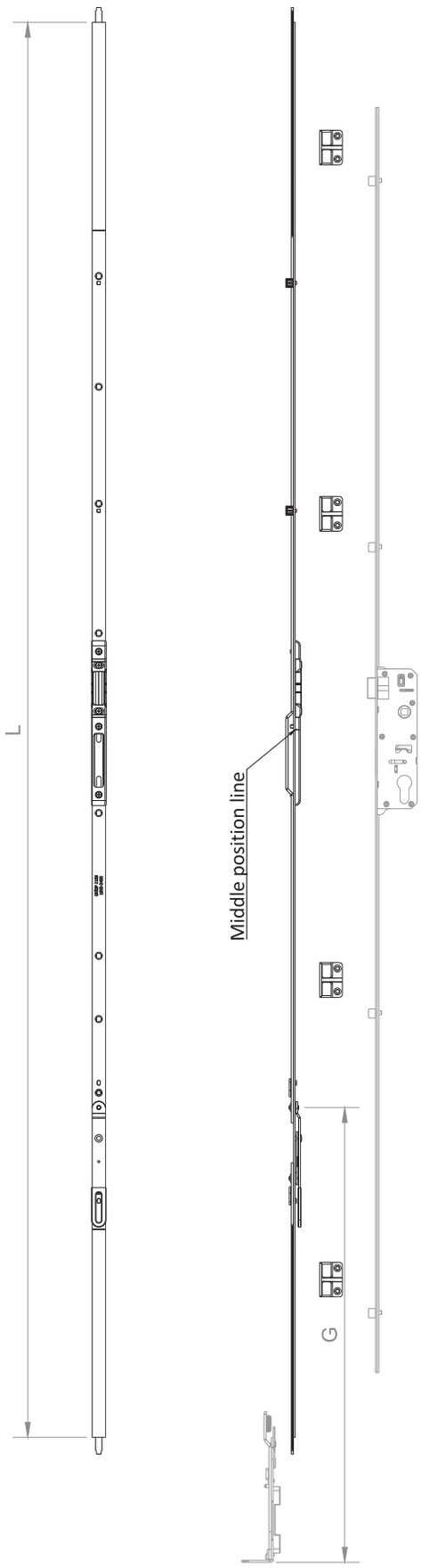

Double sash gear for lockable doors

ARTICLE NO	SRH	L	G		
01.TTS500.01.07	1700 - 2200	1900	549	9	20
01.TTS500.01.08	1900 - 2400	2100	549	11	20

Striker on double sash gear

ARTICLE NO		
01.TTS800.08.00	2	500

Corner Transmission

Corner Transmission 150x150, 1 ML

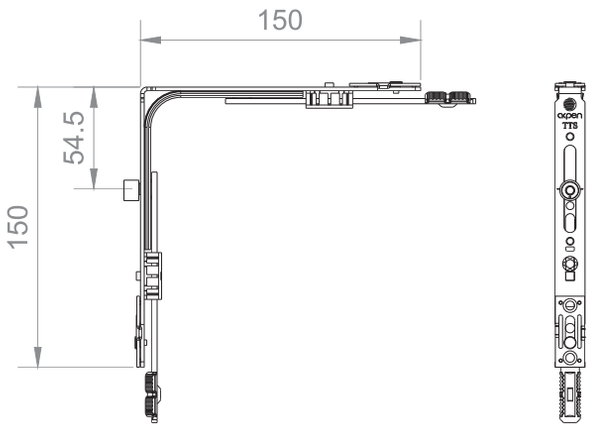

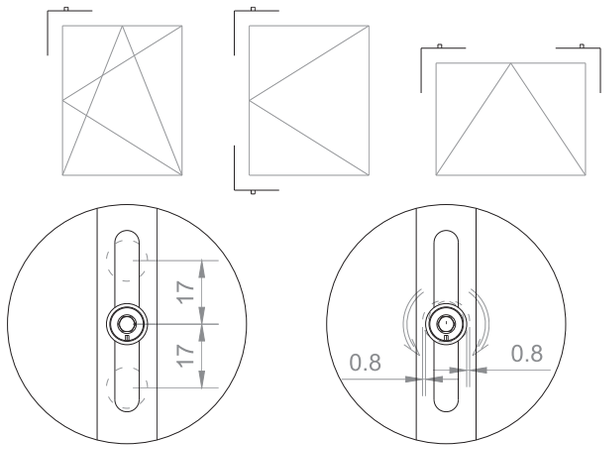

Corner Transmission 150x150, 1 SeML

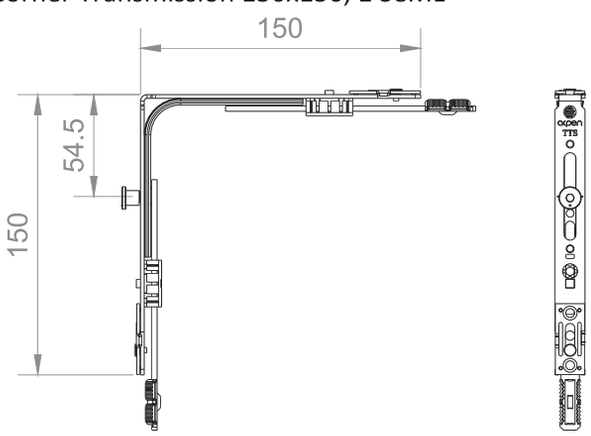

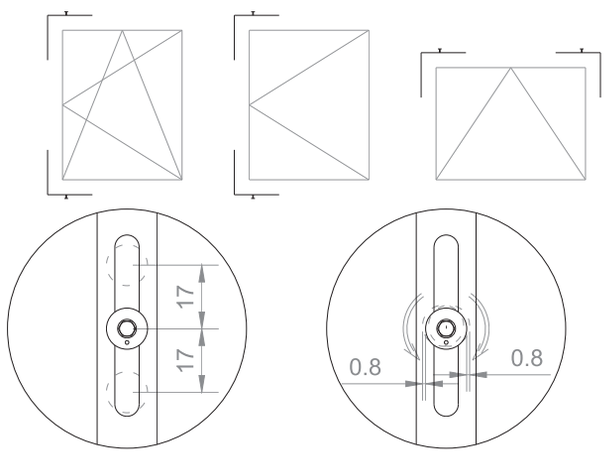

ARTICLE NO	DESCRIPTION	ML	SeML		
01.TTS401.00.01	Corner transmission 1 ML	1	-	4	100
01.TTS401.00.02	Corner transmission 1 SeML	-	1	4	100

Corner Transmission

Corner Transmission 150x150, 2 ML

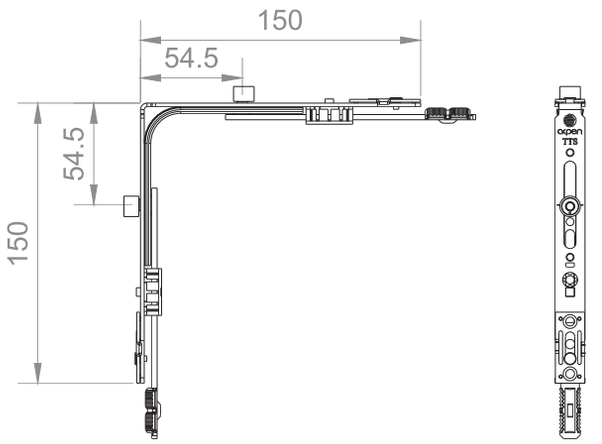

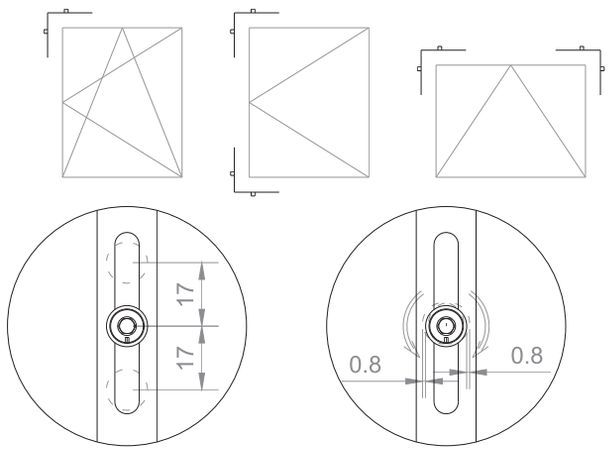

Corner Transmission 150x150, 1 ML, 1 SeML

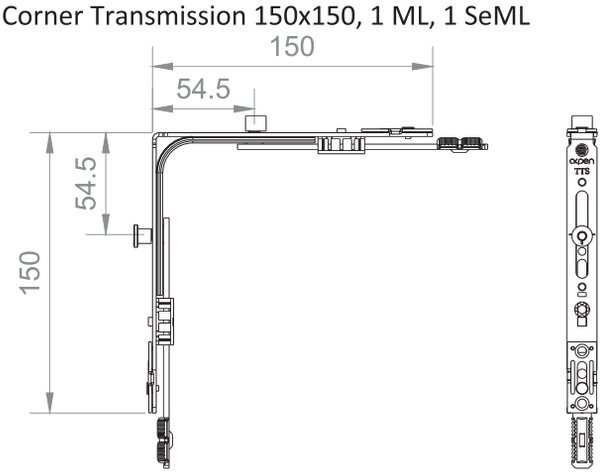

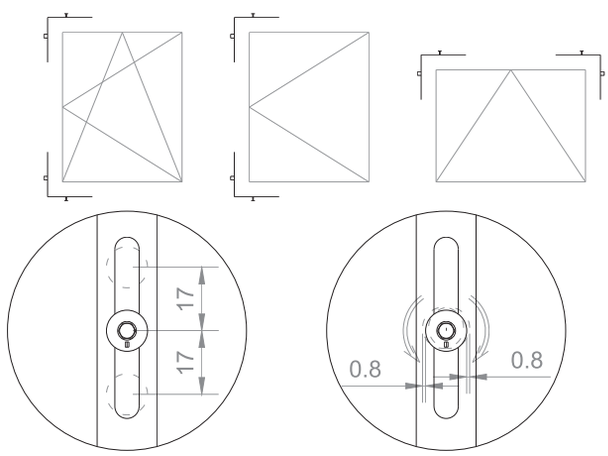

Corner Transmission 150x150, 2 SeML

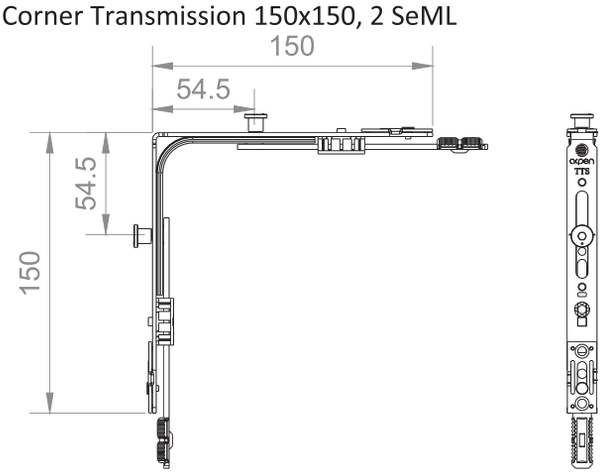

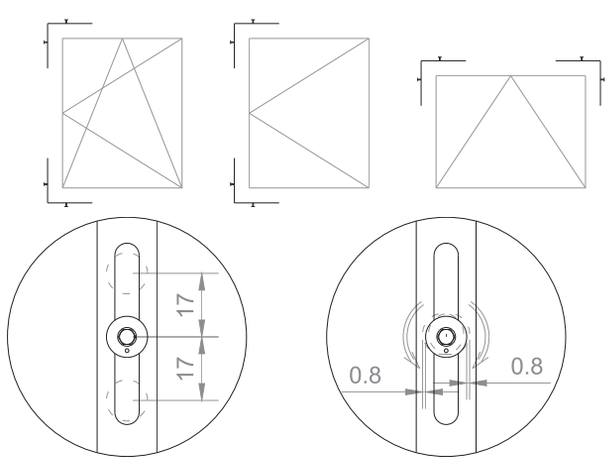

ARTICLE NO	DESCRIPTION	ML	SeML		
01.TTS401.00.11	Corner transmission 2 ML	2	-	4	100
01.TTS401.00.12	Corner transmission 1 ML, 1 SeML	1	1	4	100
01.TTS401.00.22	Corner transmission 2 SeML	-	2	4	100

Corner Transmission

Corner Transmission venti 150x150, 1 ML

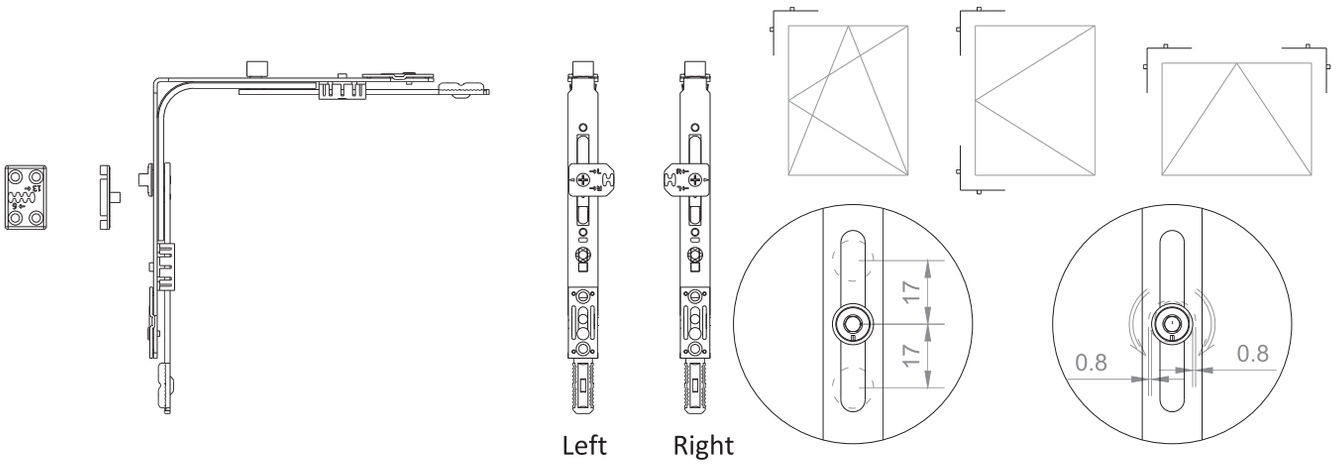

Corner Transmission venti 150x150, 1 SeML

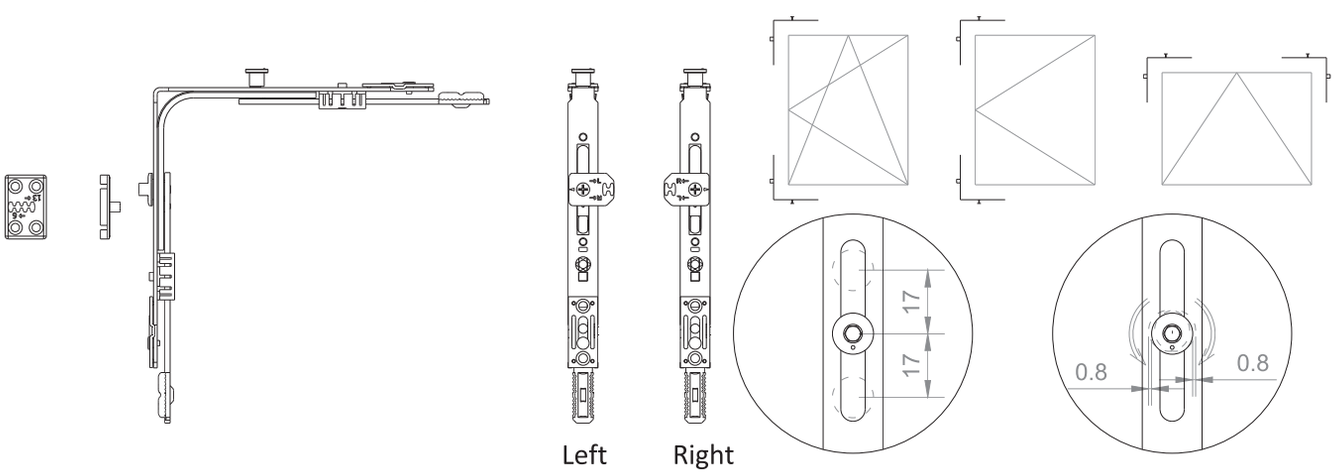

ARTICLE NO	DESCRIPTION	ML	SeML		
01.TTS401.00.13	Corner transmission venti 1 ML	1	-	4	100
01.TTS401.00.23	Corner transmission venti 1 SeML	-	1	4	100

Corner Transmission

Small Corner Transmission 150x50, 1 ML

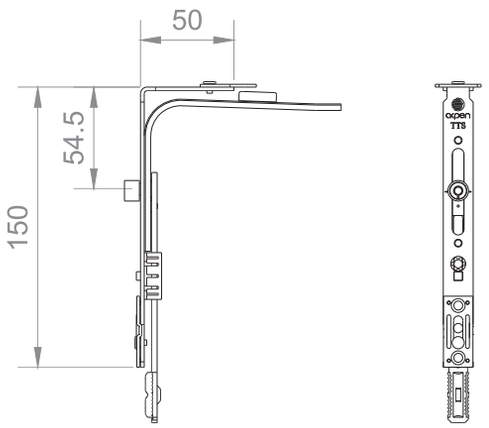

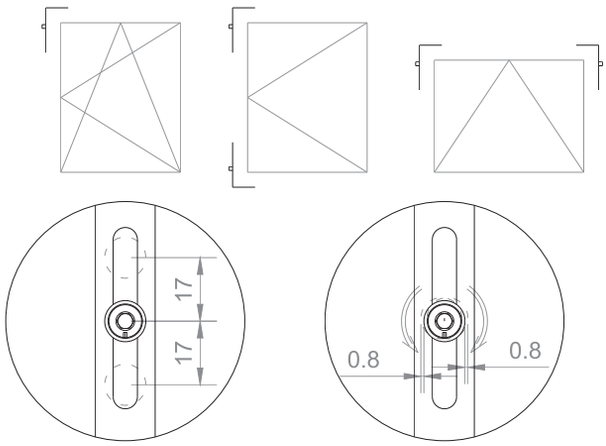

Small Corner Transmission 150x50, 1 SeML

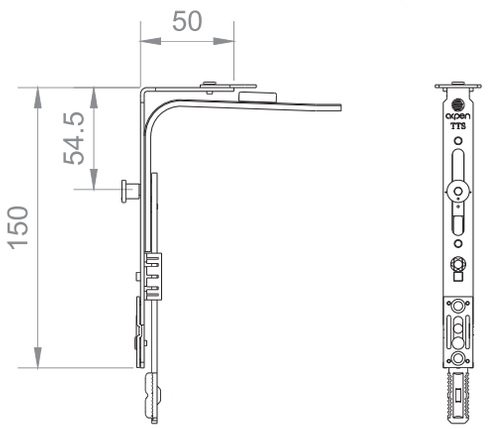

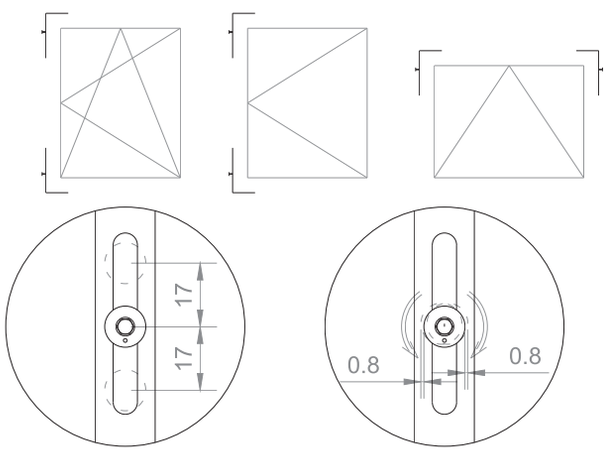

ARTICLE NO	DESCRIPTION	ML	SeML		
01.TTS401.01.01	Small Corner transmission 1 ML	1	-	4	100
01.TTS401.01.02	Small Corner transmission 1 SeML	-	1	4	100

Middle lock

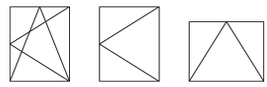

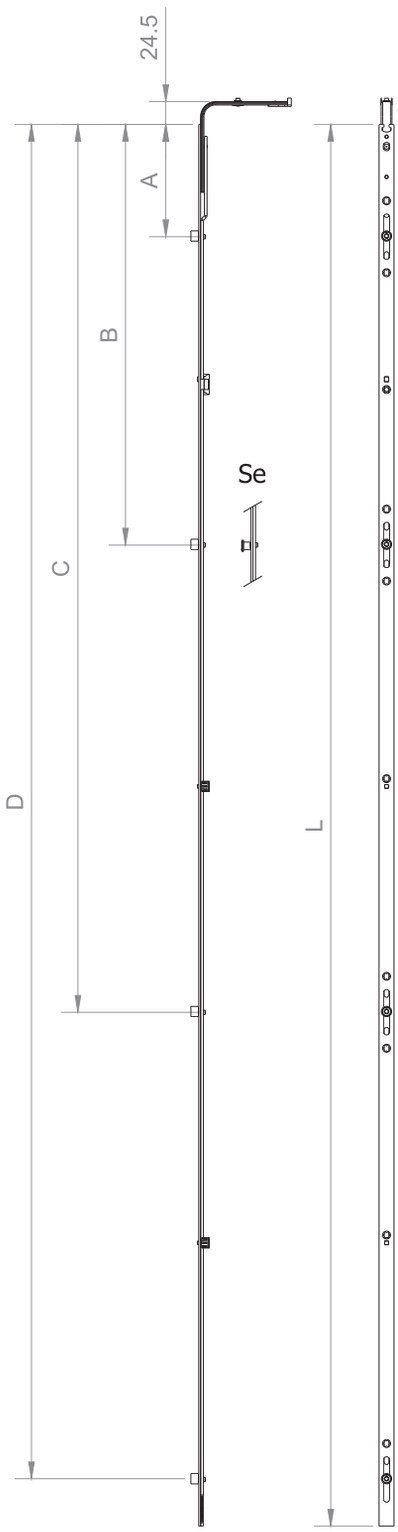

Middle lock

ARTICLE NO	SRH	L	A	B	C	D		
01.TTS310.01.01	450 - 700	170	120	-	-	-	2	20
01.TTS310.01.02	700 - 1200	500	-	450	-	-	5	20
01.TTS310.01.03	900 - 1400	700	-	650	-	-	6	20
01.TTS310.01.04	1200 - 1700	1000	-	450	950	-	7	20
01.TTS310.01.05	1700 - 2200	1500	-	450	950	1450	10	20
01.TTS310.01.06	1900 - 2400	1700	-	450	950	1650	11	20

Middle lock Se

ARTICLE NO	SRH	L	A	B	C	D		
01.TTS310.02.01	450 - 700	170	120	-	-	-	2	20
01.TTS310.02.02	700 - 1200	500	-	450	-	-	5	20
01.TTS310.02.03	900 - 1400	700	-	650	-	-	6	20
01.TTS310.02.04	1200 - 1700	1000	-	450	950	-	7	20
01.TTS310.02.05	1700 - 2200	1500	-	450	950	1450	10	20
01.TTS310.02.06	1900 - 2400	1700	-	450	950	1650	11	20

Middle lock with additional locking pin

ARTICLE NO	SRH	L	A	B	C	D		
01.TTS310.03.02	700 - 1200	500	120	450	-	-	5	20
01.TTS310.03.03	900 - 1400	700	120	650	-	-	6	20
01.TTS310.03.04	1200 - 1700	1000	120	450	950	-	7	20
01.TTS310.03.05	1700 - 2200	1500	120	450	950	1450	10	20
01.TTS310.03.06	1900 - 2400	1700	120	450	950	1650	11	20

Middle lock Se with additional locking pin

ARTICLE NO	SRH	L	A	B	C	D		
01.TTS310.04.02	700 - 1200	500	120	450	-	-	5	20
01.TTS310.04.03	900 - 1400	700	120	650	-	-	6	20
01.TTS310.04.04	1200 - 1700	1000	120	450	950	-	7	20
01.TTS310.04.05	1700 - 2200	1500	120	450	950	1450	10	20
01.TTS310.04.06	1900 - 2400	1700	120	450	950	1650	11	20

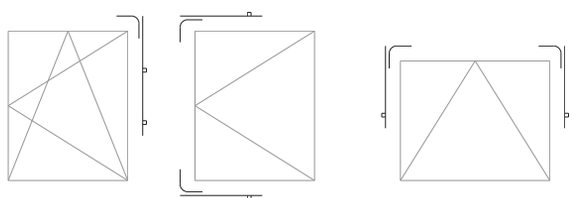

Extension lock for middle lock

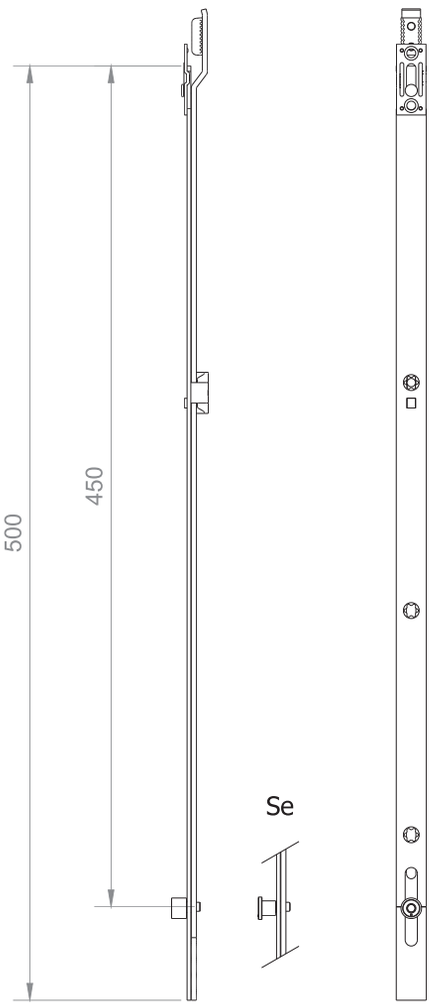

ARTICLE NO	DESCRIPTION		
01.TTS410.03.00	Extension lock for middle lock	4	20
01.TTS410.23.00	Extension lock for middle lock Se	4	20

Bottom Extension

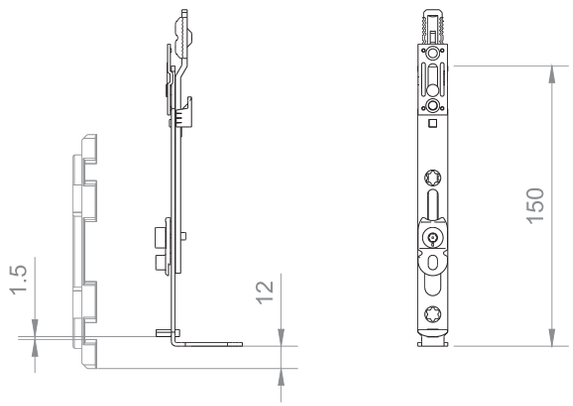

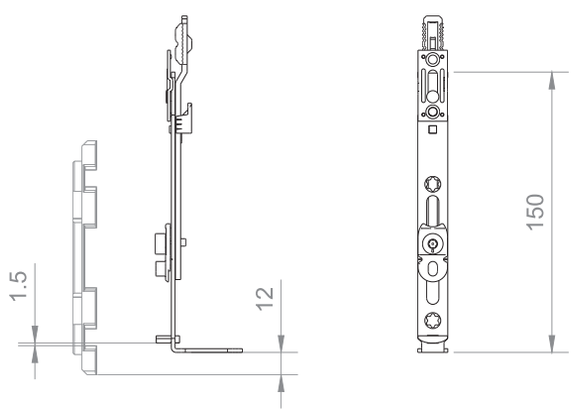

ARTICLE NO	DESCRIPTION		
01.TTS402.00.00	Bottom extension 450 - 1200	4	100
01.TTS402.03.00	Bottom extension 1200 - 2400	4	100

Bottom Extension

Bottom Extension 180°

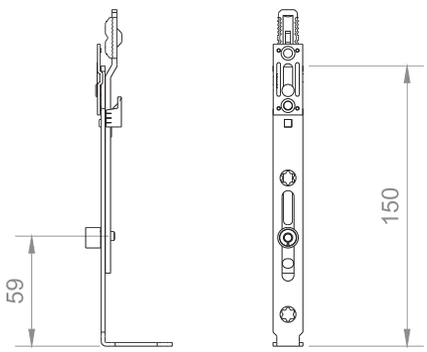

Bottom Extension Se 180°

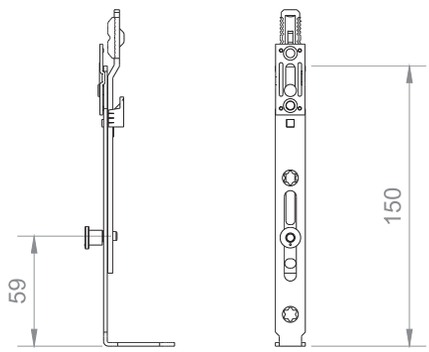

Bottom Extension 90°

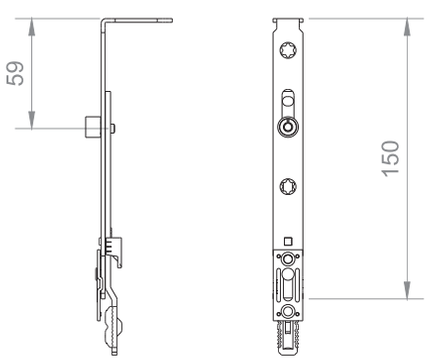

Bottom Extension Se 90°

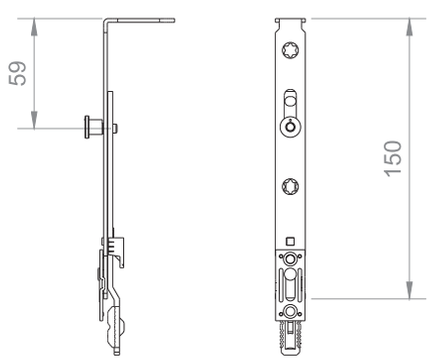

ARTICLE NO	DESCRIPTION		
01.TTS402.01.00	Bottom extension 180°	4	100
01.TTS402.02.00	Bottom extension 90°	4	100
01.TTS402.21.00	Bottom extension Se 180°	4	100
01.TTS402.22.00	Bottom extension Se 90°	4	100

Shoot bolt

Shoot bolt, top

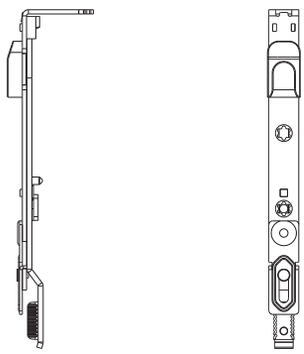

Shoot bolt, bottom

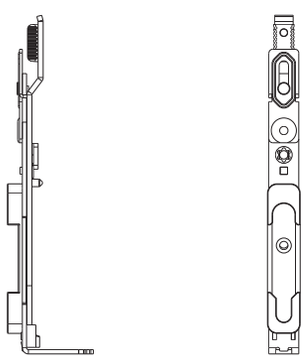

ARTICLE NO	DESCRIPTION		
01.TTS700.02.00	Shoot bolt, top	4	100
01.TTS700.01.00	Shoot bolt, bottom	4	100

Shoot bolt

Shoot bolt with lever

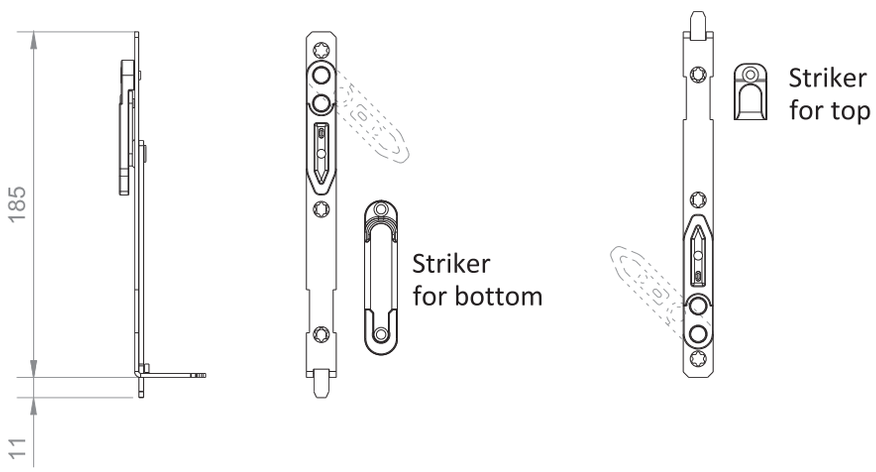

Shoot bolt with lever small

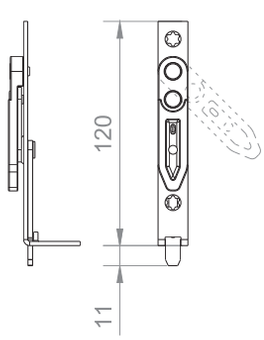

Shoot bolt for door

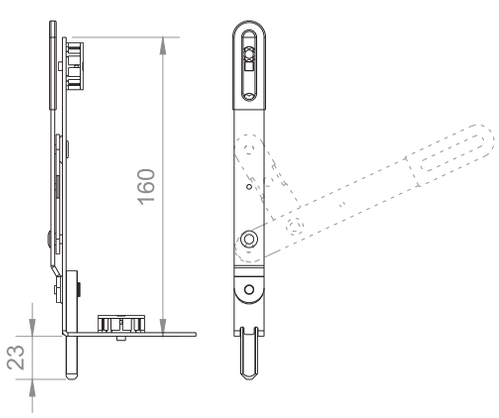

ARTICLE NO	DESCRIPTION		
01.TTS700.05.00	Shoot bolt with lever	4	100
01.TTS800.10.00	Striker for top		100
01.TTS800.11.00	Striker for bottom		100
01.TTS700.06.00	Shoot bolt with lever small	2	100
01.TTS700.07.00	Shoot bolt for door	4	100

Shoot bolt

Shoot bolt strikers

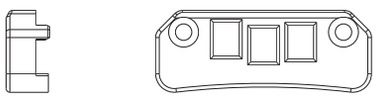

9 mm

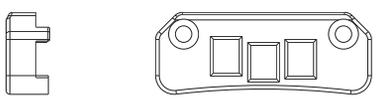

13 mm

Adjustments

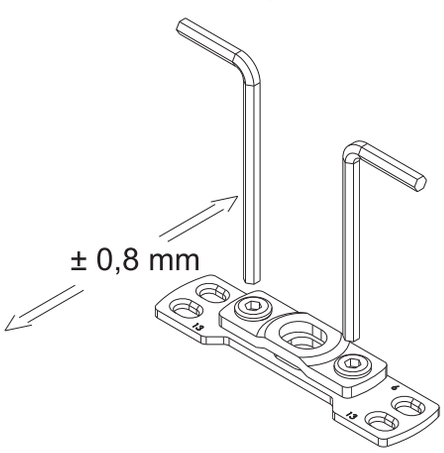

Adjustable shoot bolt strikers

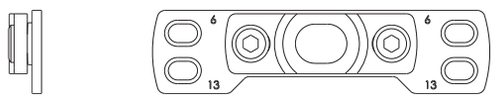

Oval without anchorage

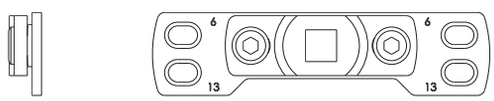

Square without anchorage

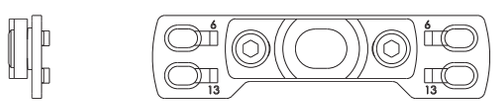

Oval with anchorage

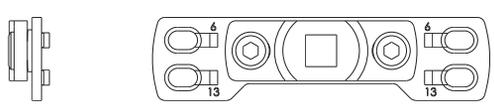

Square with anchorage

ARTICLE NO	DESCRIPTION		
01.TTS800.01.00	Adjustable shoot bolt striker, oval, without anchorage	4	100
01.TTS800.02.00	Adjustable shoot bolt striker, square, without anchorage	4	100
01.TTS800.03.00	Adjustable shoot bolt striker, oval, with anchorage	4	100
01.TTS800.04.00	Adjustable shoot bolt striker, square, with anchorage	4	100
01.TTS800.06.00	Shoot bolt striker 9 mm	2	100
01.TTS800.07.00	Shoot bolt striker 13 mm	2	100

Extension lock

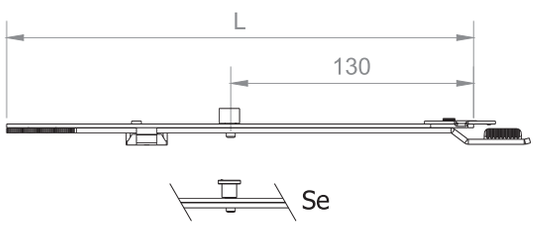



ARTICLE NO	DESCRIPTION	L		
01.TTS410.01.00	Extension lock 250 mm	250	3	100
01.TTS410.02.00	Extension lock 500 mm	500	4	20
01.TTS410.21.00	Extension lock Se 250 mm	250	3	100
01.TTS410.22.00	Extension lock Se 500 mm	500	4	20

Stay Arm

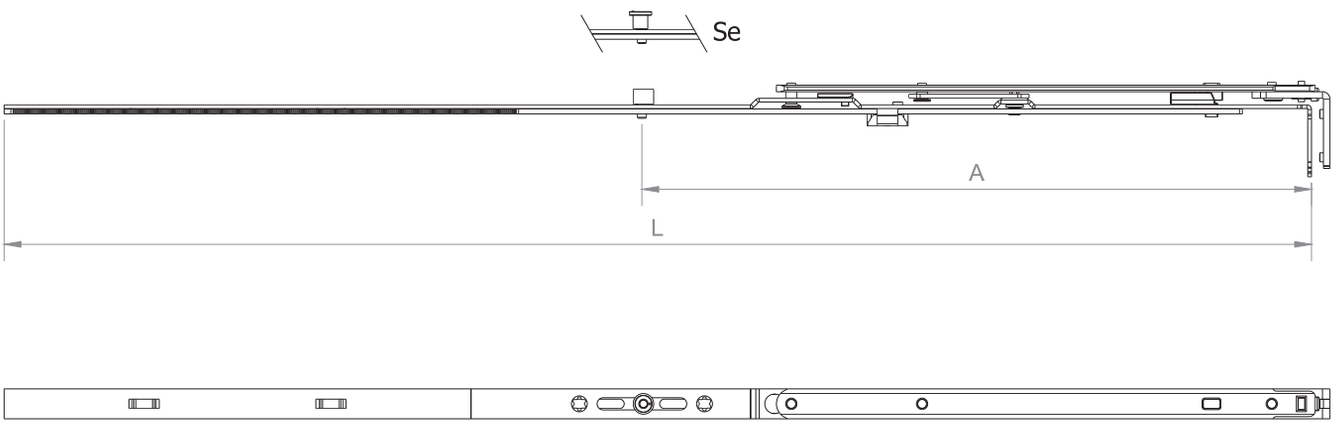

Stay Arm ARTICLE NO	SRW	L	A		
01.TTS210.00.01	350 - 600	450	-	4	20
01.TTS210.00.02	400 - 650	500	-	4	20
01.TTS210.01.03	600 - 850	700	358,5	7	20
01.TTS210.01.04	850 - 1100	950	543	8	20
01.TTS210.01.05	1100 - 1350	1200	653	10	20

Stay Arm Se ARTICLE NO	SRW	L	A		
01.TTS210.02.03	600 - 850	700	358,5	7	20
01.TTS210.02.04	850 - 1100	950	543	8	20
01.TTS210.02.05	1100 - 1350	1200	653	10	20

Stay Arm, tilt first ARTICLE NO	SRW	L	A		
01.TTS211.00.01	350 - 600	450	-	4	20
01.TTS211.00.02	400 - 650	500	-	4	20
01.TTS211.01.03	600 - 850	700	358,5	7	20
01.TTS211.01.04	850 - 1100	950	543	8	20
01.TTS211.01.05	1100 - 1350	1200	653	10	20

Stay Arm Se, tilt first ARTICLE NO	SRW	L	A		
01.TTS211.02.03	600 - 850	700	358,5	7	20
01.TTS211.02.04	850 - 1100	950	543	8	20
01.TTS211.02.05	1100 - 1350	1200	653	10	20

Top sash hinge

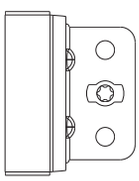

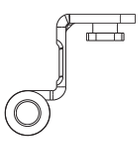

Cover of Top sash hinge

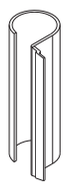

How to assemble

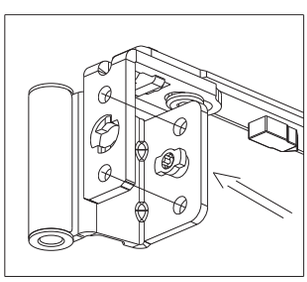

1

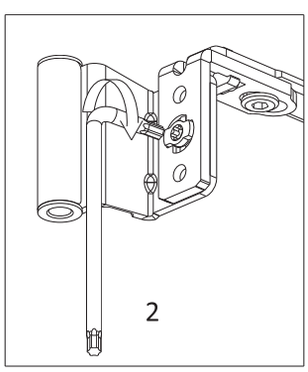

2

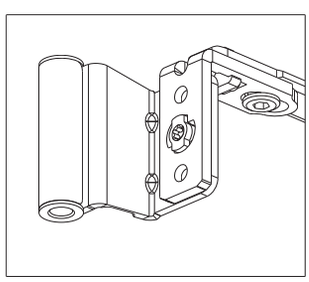

3

Top sash hinge ARTICLE NO	FITTING AXIS	SASH OVERLAP	SASH WEIGHT	OPENING SIDE		
01.TTS403.01.00	9	20	130 kg	L / R	-	100
01.TTS403.02.00	13	20	130 kg	L / R	-	100
01.TTS403.04.00	14	20	130 kg	L / R	-	100

Cover of top sash hinge ARTICLE NO	DESCRIPTION	
01.TTS408.T1.**	Cover of top sash hinge	100

Hinges

Stay arm bearing
with anchorage 100 kg

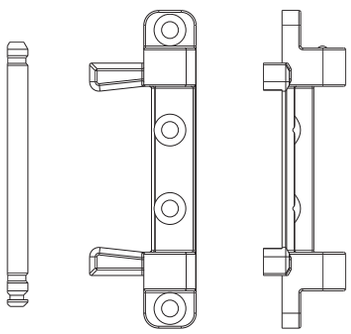

Stay arm bearing 100 kg

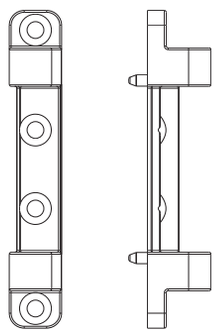

Stay arm bearing 130 kg

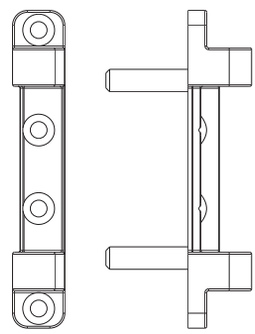

Cover of
Stay arm bearing

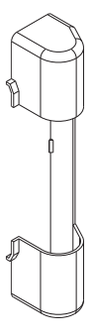

Drilling for
stay arm bearing 100 kg

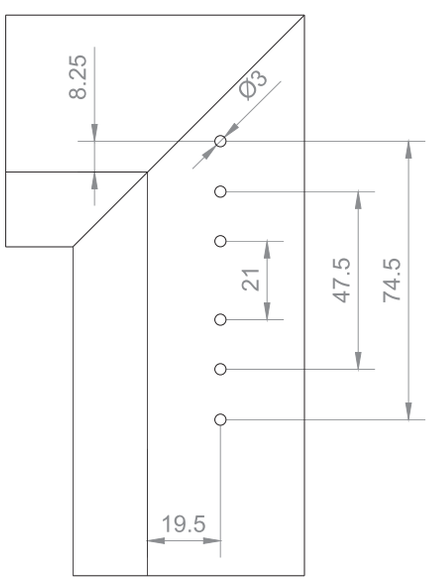

Drilling for
stay arm bearing 130 kg

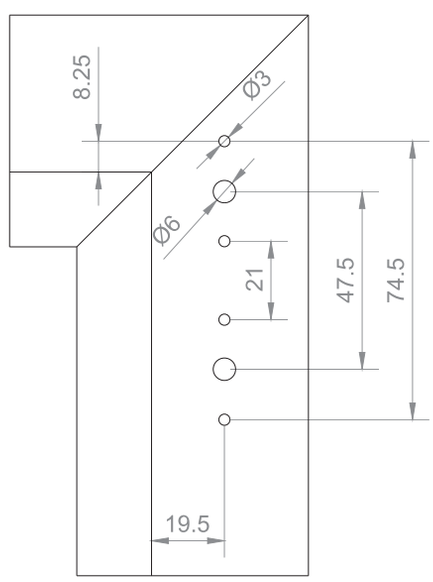

Stay arm bearing ARTICLE NO	DESCRIPTION	SASH WEIGHT		
01.TTS405.00.00	Stay arm bearing with anchorage	100 kg	4	100
01.TTS405.01.00	Stay arm bearing 100 kg	100 kg	4	100
01.TTS405.02.00	Stay arm bearing 130 kg	130 kg	4	100

Cover of stay arm bearing ARTICLE NO	DESCRIPTION	
01.TTS408.T2.**	Cover of stay arm bearing	100

Drill-in corner hinge 100 kg

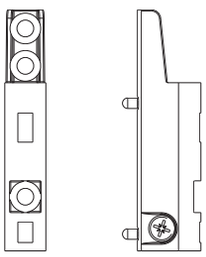

Drill-in corner hinge 130 kg

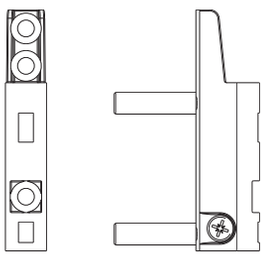

Cover of drill-in corner hinge

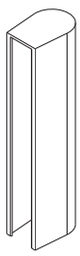

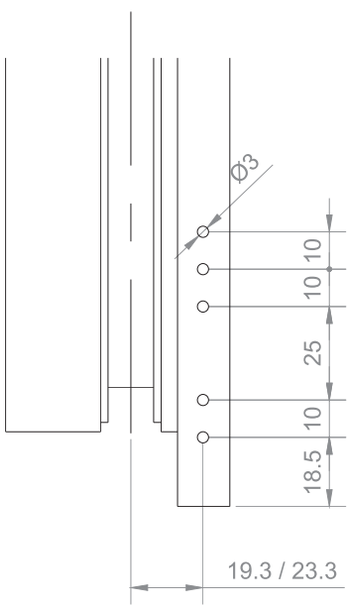

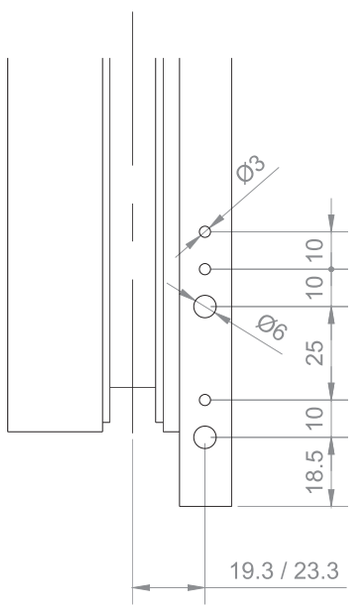

Drill-in corner hinge ARTICLE NO	DESCRIPTION	SASH WEIGHT		
01.TTS404.00.00	Drill-in corner hinge 100 kg	100 kg	3	100
01.TTS404.01.00	Drill-in corner hinge 130 kg	100 kg	3	100

Cover of drill-in corner hinge ARTICLE NO	DESCRIPTION	
01.TTS408.T3.**	Cover of stay arm bearing	100

Corner bearing 100 kg

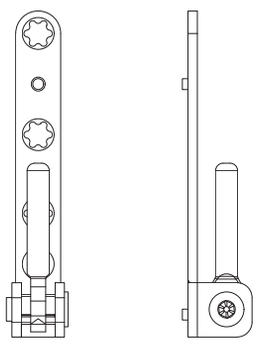

Corner bearing 130 kg

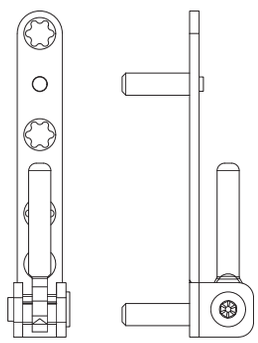

Cover of corner bearing

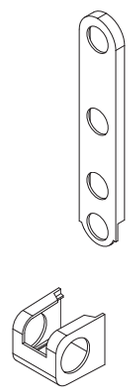

Drilling for
corner bearing 100 kg

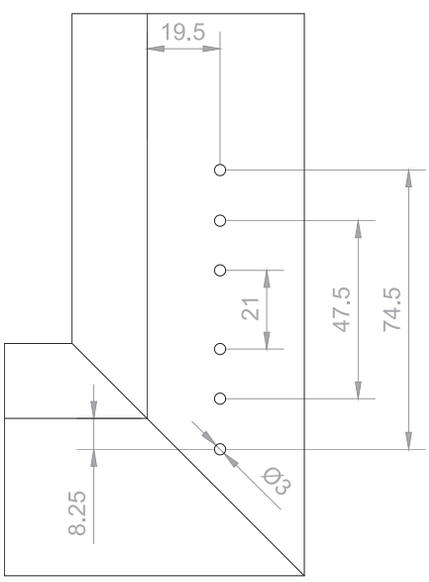

Drilling for
corner bearing 130 kg

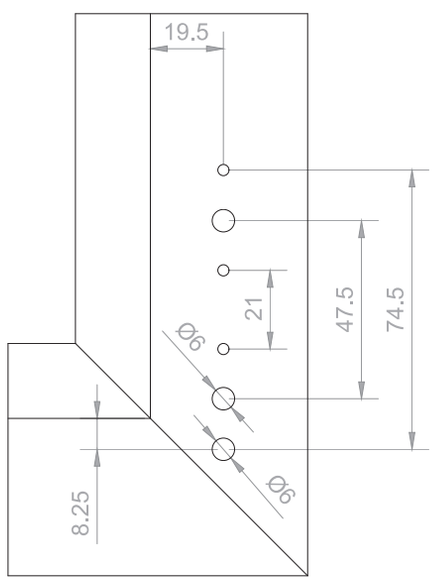

Corner bearing ARTICLE NO	DESCRIPTION	SASH WEIGHT		
01.TTS406.00.00	Corner bearing 100 kg	100 kg	4	100
01.TTS406.01.00	Corner bearing 130 kg	130 kg	4	100

Hinge cover set

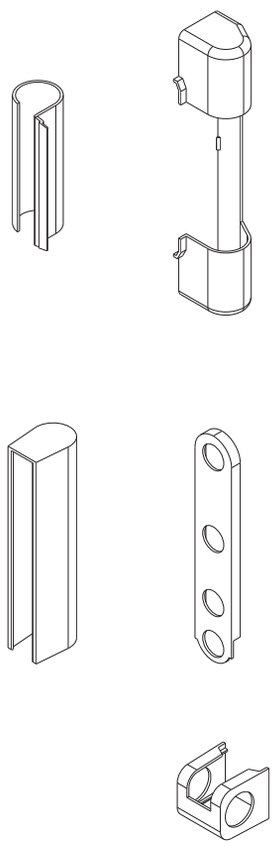

Hinge cover set
for middle hinge

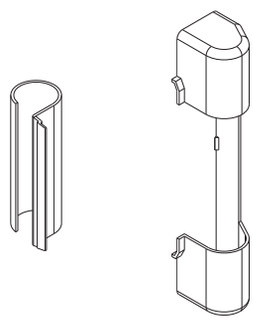

Cover sets ARTICLE NO	DESCRIPTION	
01.TTS408.00.**	Hinge cover set	100
01.TTS408.01.**	Hinge cover set for middle hinge	100

Adjustable Side Hung Hinge

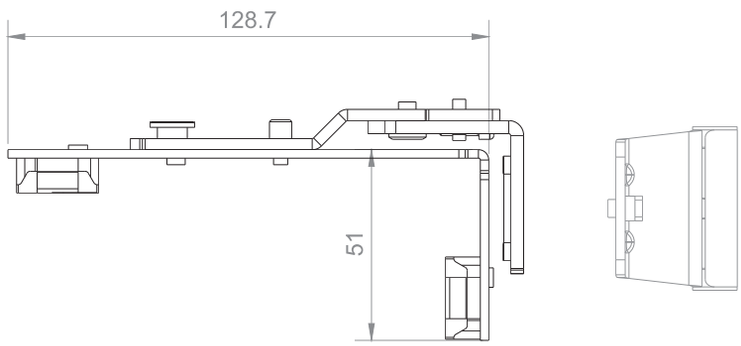

Adjustments

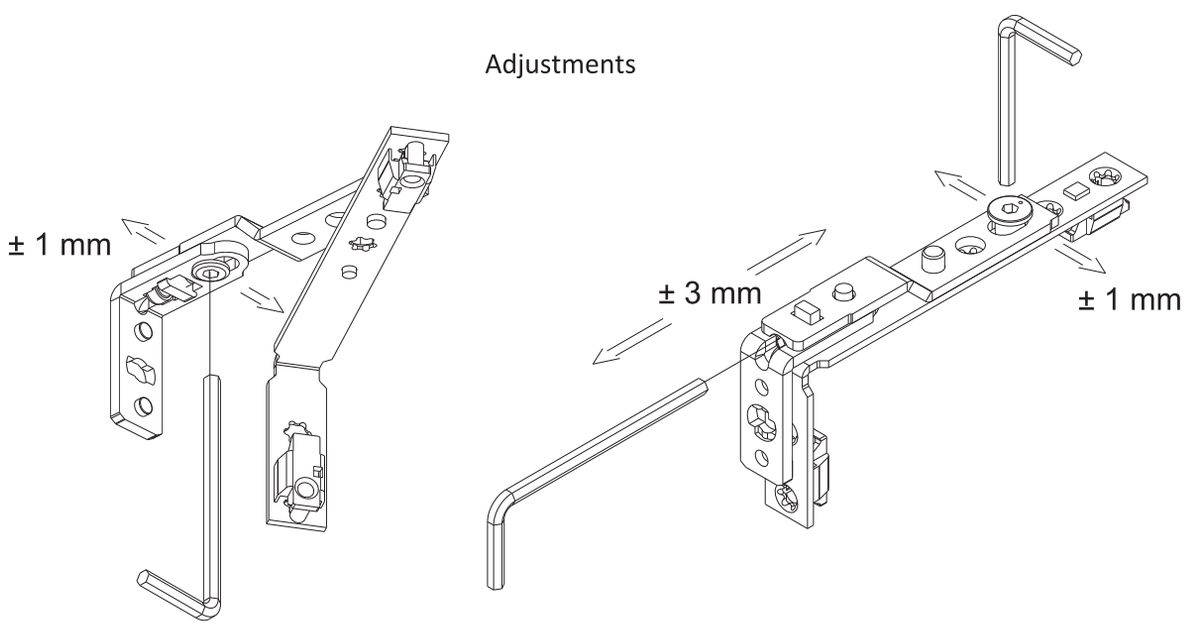

Adjustable side hung hinge

ARTICLE NO	DESCRIPTION	SASH WEIGHT		
01.TTS600.00.00	Adjustable side hung hinge	130 kg	5	100

2D Adjustable
Middle hinge

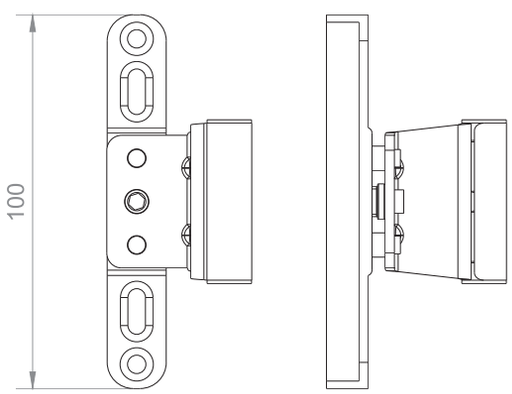

3D Adjustable
Middle hinge

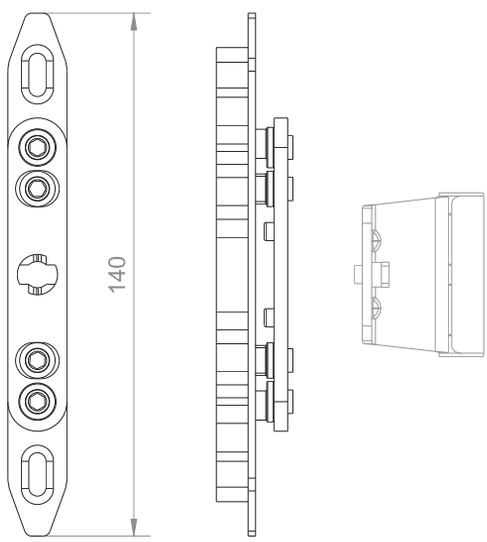

Adjustments

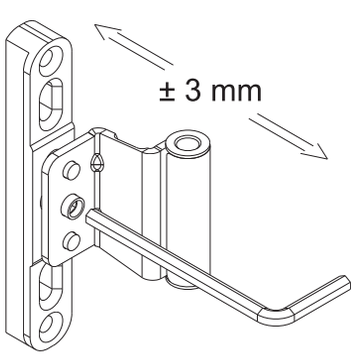

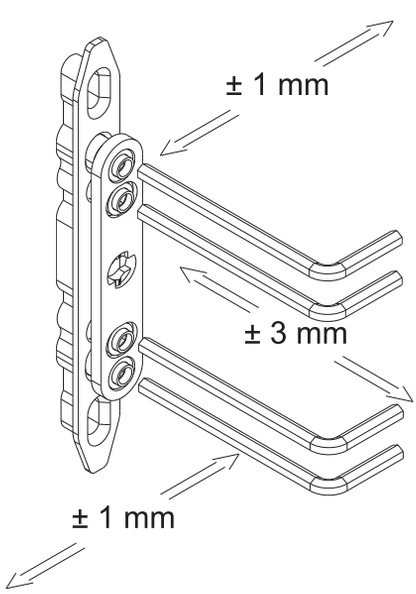

Middle hinges

ARTICLE NO	DESCRIPTION	
01.TTS600.09.00	2D Adjustable middle hinge 9 mm	100
01.TTS600.13.00	2D Adjustable middle hinge 13 mm	100
01.TTS600.01.00	3D Adjustable middle hinge	100

Rebate Corner Hinge

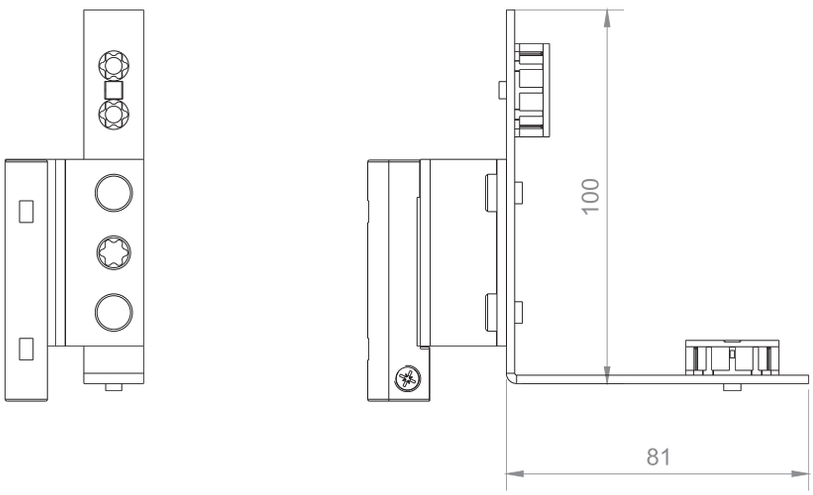

Adjustments

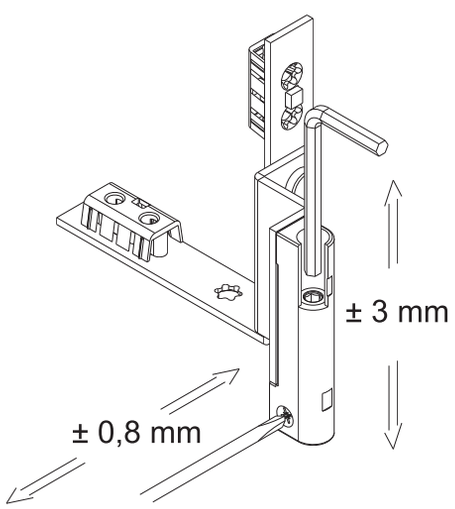

Rebate corner hinge ARTICLE NO	DESCRIPTION	
01.TTS600.L1.00	Rebate corner hinge 13 mm left	100
01.TTS600.R1.00	Rebate corner hinge 13 mm right	100
01.TTS600.L2.00	Rebate corner hinge 9 mm left	100
01.TTS600.L1.00	Rebate corner hinge 9 mm right	100

Concealed Middle Hinge

Sash part

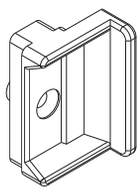

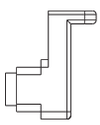

Frame part

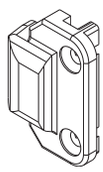



Concealed middle hinge ARTICLE NO	DESCRIPTION	
01.TTS600.04.00	Concealed middle hinge 9 mm	100
01.TTS600.05.00	Concealed middle hinge 13 mm	100

Wrong opration safety device with sash lifter

Lifting plate

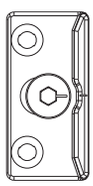

Wrong operation safety device with sash lifter

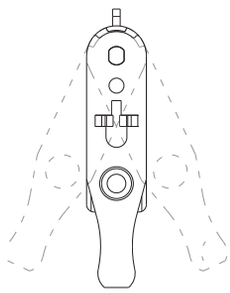

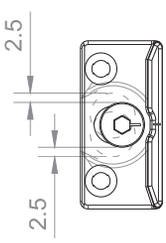

ARTICLE NO	DESCRIPTION	
01.TTS409.00.00	Wrong operation safety device with sash lifter	100
01.TTS409.01.00	Lifting plate 9 mm	100
01.TTS409.02.00	Lifting plate 13 mm	100

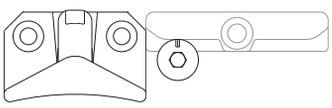



Handle 0° (Closed)

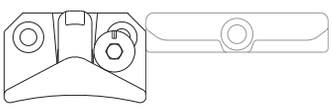



Handle 90° (Turn opening)

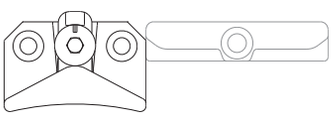

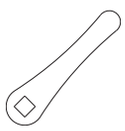

Handle 135° (Micro ventilation)

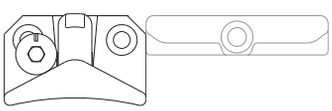



Handle 180° (Micro ventilation)

ARTICLE NO	DESCRIPTION		
01.TTS407.50.00	Striker for microvantilation	2	100

Teeth connection

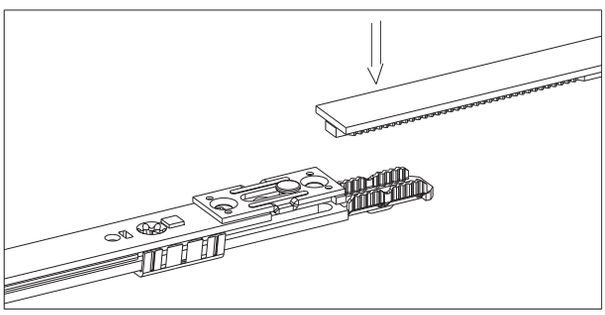

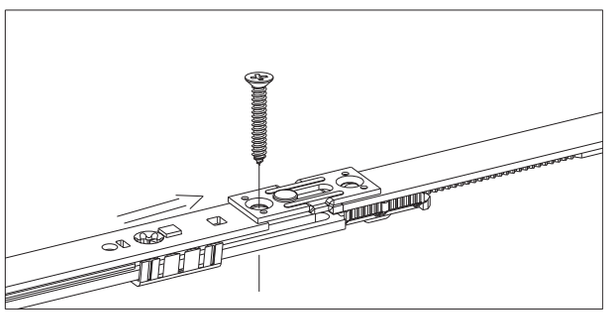

Stay arm and middle lock connection

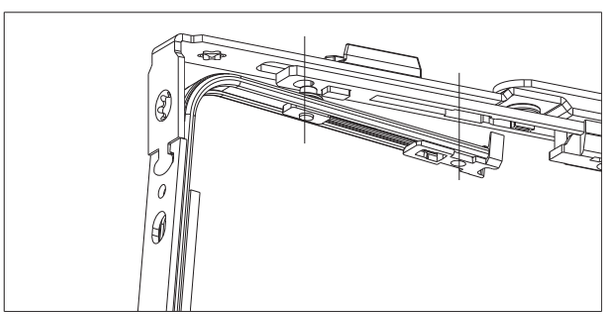

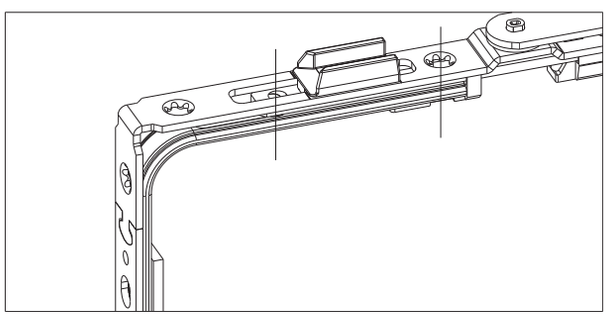

Axle installation

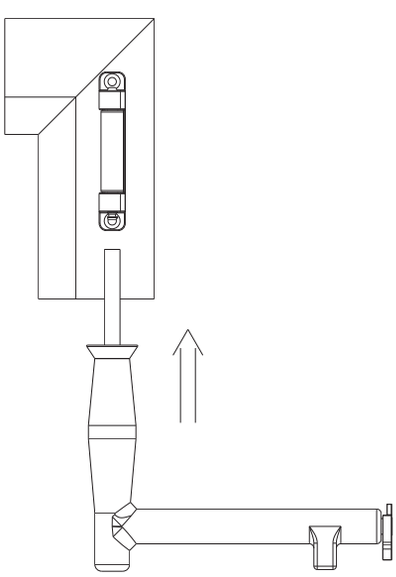

Axle removal

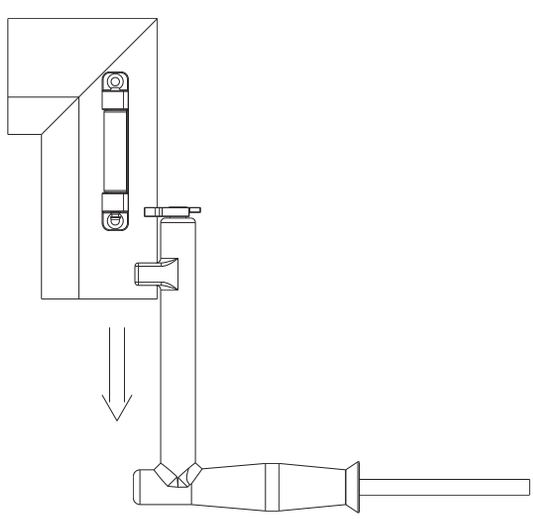

Stay arm adjustments

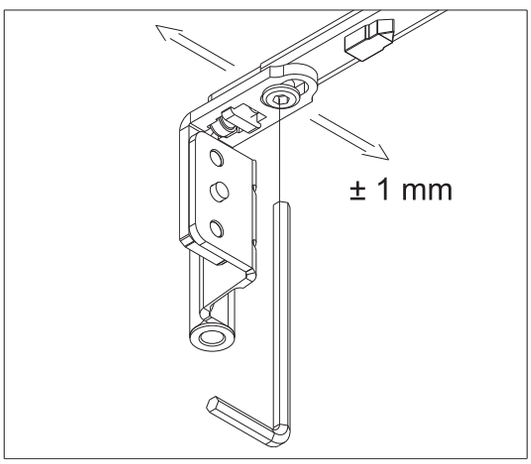

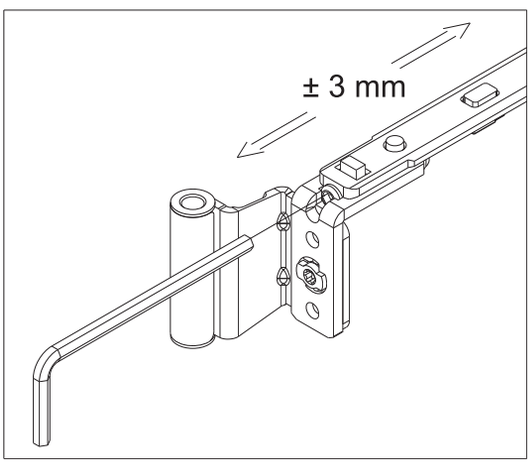

Bottom hinmge adjustments

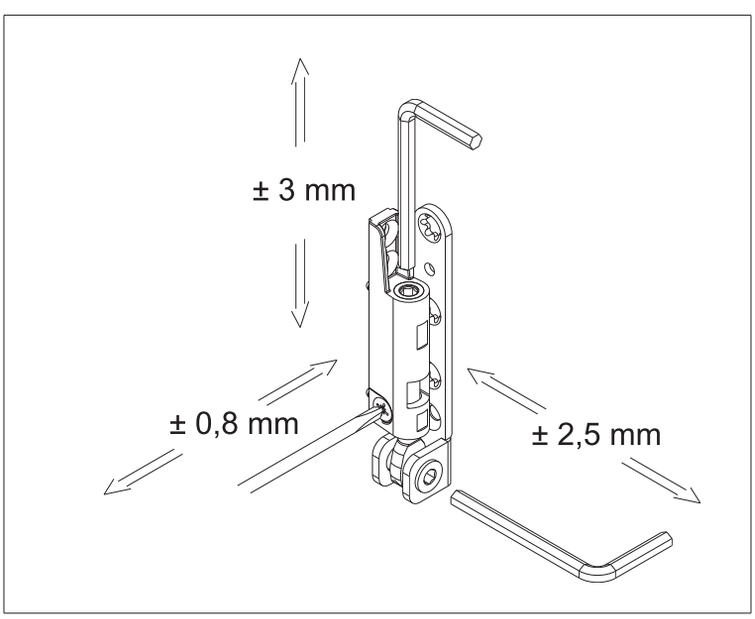

Drilling Jigs for Hinges

Frame drilling jig 100 kg

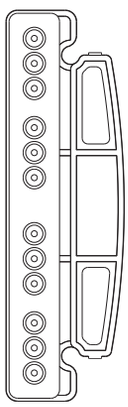

Frame drilling jig 130 kg

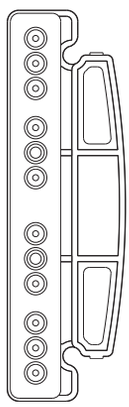

Sash drilling jig 100 kg

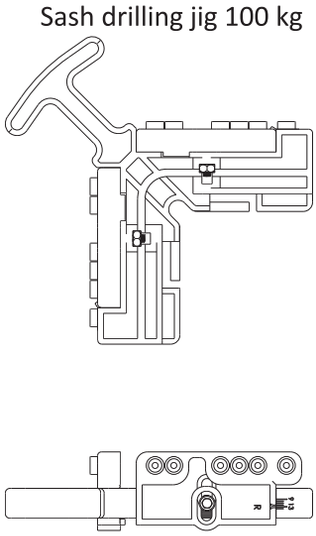

Sash drilling jig 130 kg

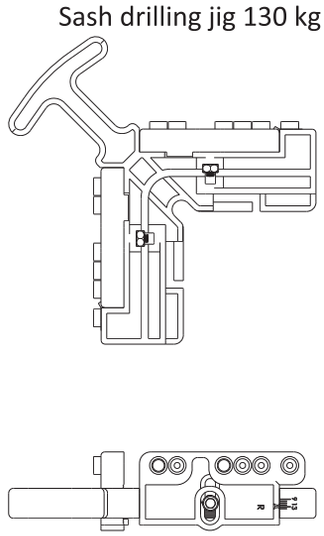

Drilling jigs for tilt & turn hinges

ARTICLE NO	DESCRIPTION
00.SBL003.01.00	Sash drilling jig 100 kg
00.SBL003.02.00	Frame drilling jig 100 kg
00.SBL004.01.00	Sash drilling jig 130 kg
00.SBL004.02.00	Frame drilling jig 130 kg

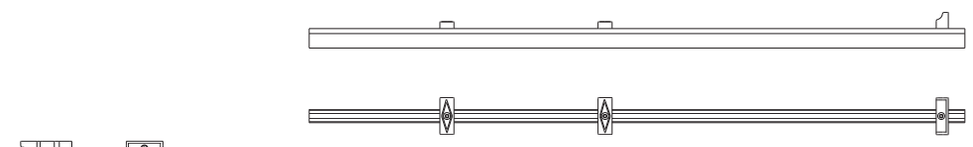

Jig for stay arm strikers

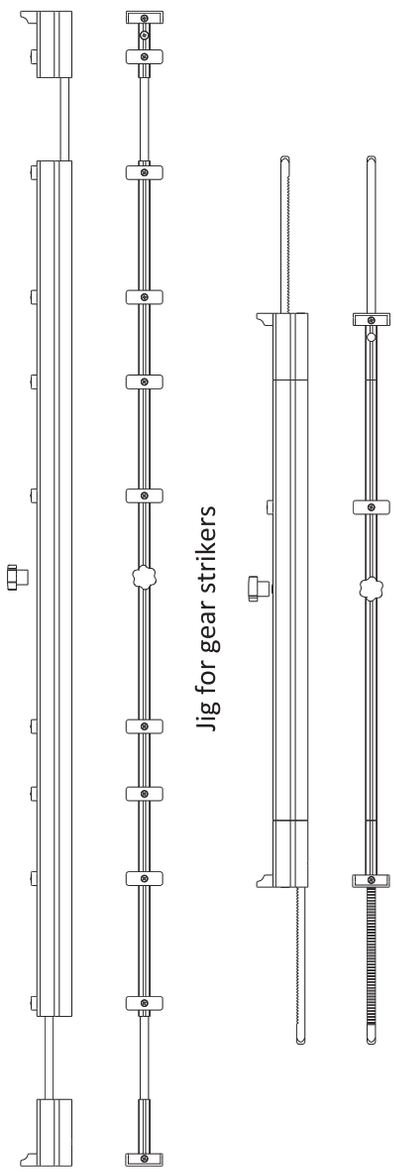

Jig for gear strikers

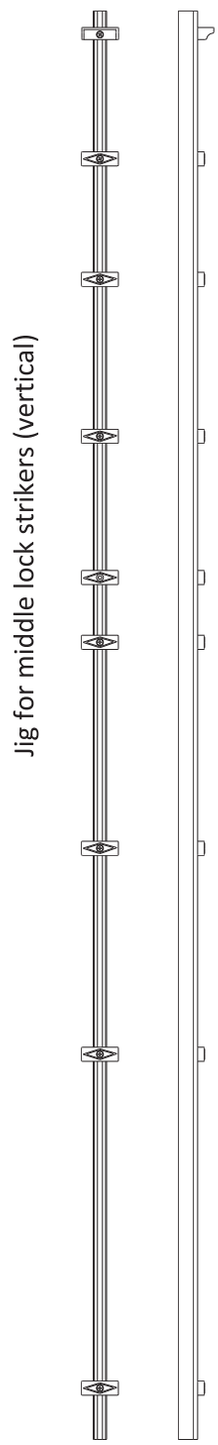

Jig for middle lock strikers (vertical)

Jig for middle lock strikers (horizontal)

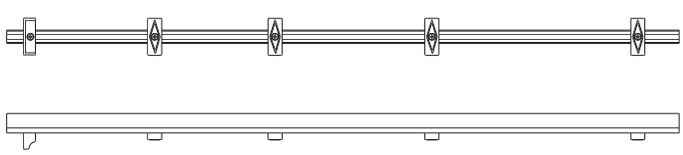

Drilling jigs for tilt & turn hinges

ARTICLE NO	DESCRIPTION
00.SBL010.00.00	Jigs for strikers

Locations of the strikers

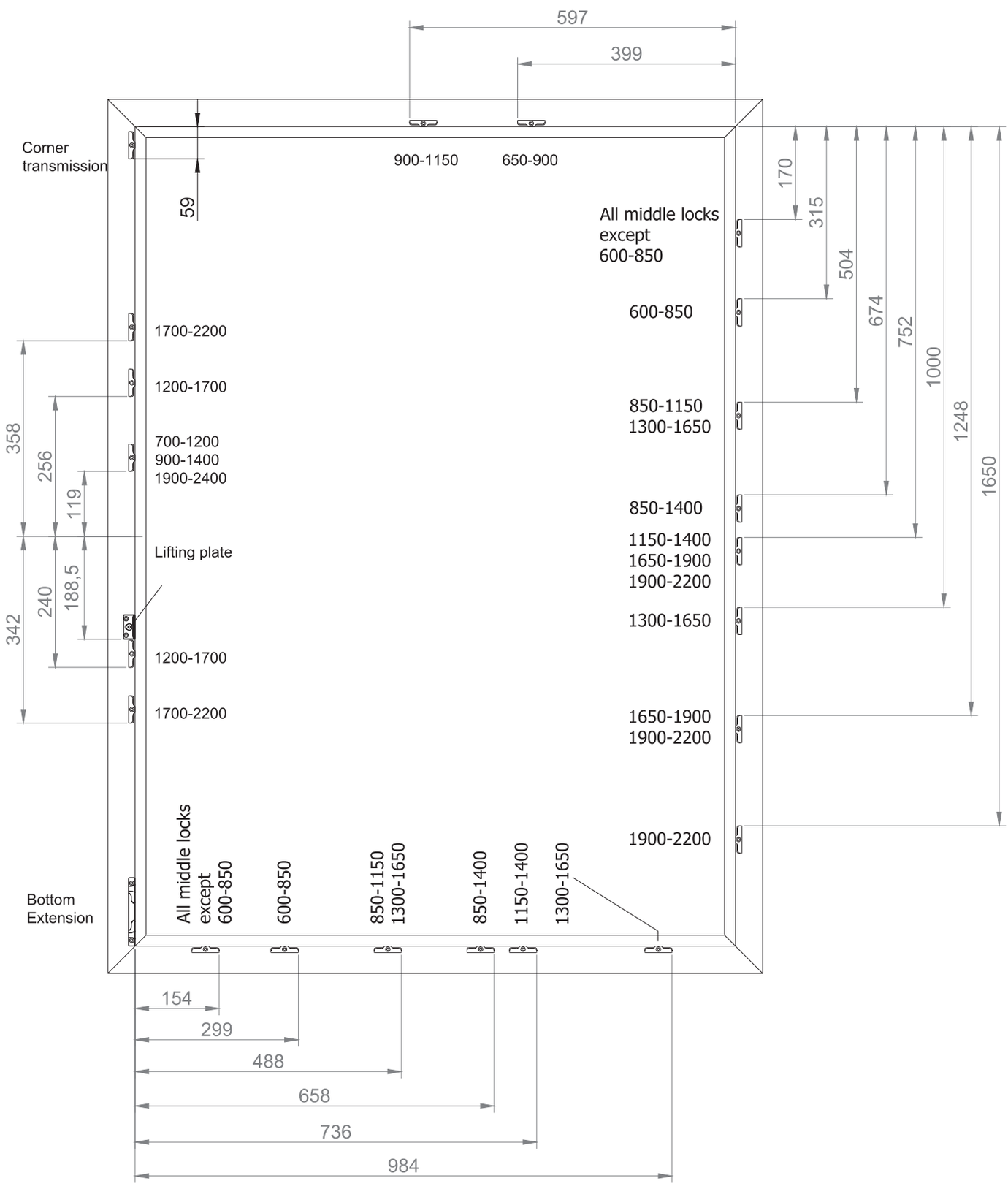

Profile list

PROFILE NAME	FITTING AXIS	OVERLAP HEIGHT	STANDARD STRIKER	TILT STRIKER VERTICAL	TILT STRIKER HORIZONTAL	SECURITY STRIKER	LIFTING PLATE
ADOPEN / 888	13	20	00.IZK004.0E.00	01.TTS407.12.00	01.TTS407.22.00	01.TTS407.60.00	01.TTS409.02.00
ADOPEN / Pasifik 800-860	13	20	00.IZK004.0E.00	01.TTS407.12.00	01.TTS407.22.00	01.TTS407.60.00	01.TTS409.02.00
ADOPEN / Pasifik 873	13	20	00.IZK004.0E.00	01.TTS407.12.00	01.TTS407.22.00	01.TTS407.60.00	01.TTS409.02.00
ADOPEN / Atlantik 777	13	20	00.IZK004.0E.00	01.TTS407.12.00	01.TTS407.22.00	01.TTS407.60.00	01.TTS409.02.00
ADOPEN / Atlantik 752-750	13	20	00.IZK004.0E.00	01.TTS407.12.00	01.TTS407.22.00	01.TTS407.60.00	01.TTS409.02.00
ADOPEN / Atlantik 760	13	20	00.IZK004.0E.00	01.TTS407.12.00	01.TTS407.22.00	01.TTS407.60.00	01.TTS409.02.00
ADOPEN / Marmara 632	13	20	00.IZK004.0E.00	01.TTS407.12.00	01.TTS407.22.00	01.TTS407.60.00	01.TTS409.02.00
AKFA 5200 Trio (Özbekistan)	9	20	00.IZK002.0E.00	01.TTS407.11.00	01.TTS407.21.00		01.TTS409.01.00
AKFA 5200 Quadro (Özbekistan)	9	20	00.IZK002.0E.00	01.TTS407.11.00	01.TTS407.21.00		01.TTS409.01.00
AKFA 6000 Trio (Özbekistan)	9	20	00.IZK002.0E.00	01.TTS407.11.00	01.TTS407.21.00		01.TTS409.01.00
AKFA 6000 Quadro (Özbekistan)	9	20	00.IZK002.0E.00	01.TTS407.11.00	01.TTS407.21.00		01.TTS409.01.00
AKFA 6000 Eko (Özbekistan)	13	20	00.IZK004.0E.00	01.TTS407.12.00	01.TTS407.22.00	01.TTS407.60.00	01.TTS409.02.00
AKFA 7000 Eko (Özbekistan)	13	20	00.IZK004.0E.00	01.TTS407.12.00	01.TTS407.22.00	01.TTS407.60.00	01.TTS409.02.00
ALFAPEN / Armada	9	20	00.IZK022.00.00	01.TTS407.11.00	01.TTS407.21.00		01.TTS409.01.00
ALFAPEN / Pro 7000	13	20	00.IZK004.0E.00	01.TTS407.12.00	01.TTS407.22.00	01.TTS407.60.00	01.TTS409.02.00
ALUPLAST / Ideal 2000	13	20	00.IZK004.0E.00	01.TTS407.12.00	01.TTS407.22.00	01.TTS407.60.00	01.TTS409.02.00
ALUPLAST / Ideal 4000	13	20	00.IZK004.0E.00	01.TTS407.12.00	01.TTS407.22.00	01.TTS407.60.00	01.TTS409.02.00
ALUPLAST / Ideal 5000	13	20	00.IZK004.0E.00	01.TTS407.12.00	01.TTS407.22.00	01.TTS407.60.00	01.TTS409.02.00
ALUPLAST / Ideal 8000	13	20	00.IZK004.0E.00	01.TTS407.12.00	01.TTS407.22.00	01.TTS407.60.00	01.TTS409.02.00
ASAŞPEN / Bahar Serisi 52 mm	9	20	00.IZK002.0E.00	01.TTS407.11.00	01.TTS407.21.00		01.TTS409.01.00
ASAŞPEN / Diamond Serisi 60 mm	13	20	00.IZK043.00.00	01.TTS407.12.00	01.TTS407.22.00	01.TTS407.60.00	01.TTS409.02.00
ASAŞPEN / Elegans Serisi 60 mm	13	20	00.IZK043.0E.00	01.TTS407.12.00	01.TTS407.22.00	01.TTS407.60.00	01.TTS409.02.00
ASAŞPEN / Maxi Royal Sistem 70 mm	13	20	00.IZK020.0E.00	01.TTS407.12.00	01.TTS407.22.00	01.TTS407.60.00	01.TTS409.02.00
ASAŞPEN / Maxi Plus Sistem 80 mm	13	20	00.IZK020.0E.00	01.TTS407.12.00	01.TTS407.22.00	01.TTS407.60.00	01.TTS409.02.00
ASAŞPEN / Empire Sistem 120 mm	13	20	00.IZK020.0E.00	01.TTS407.12.00	01.TTS407.22.00	01.TTS407.60.00	01.TTS409.02.00
BAUPLAST / Noble	13	20	00.IZK004.0E.00	01.TTS407.12.00	01.TTS407.22.00	01.TTS407.60.00	01.TTS409.02.00
BAUPLAST / Advance	13	20	00.IZK004.0E.00	01.TTS407.12.00	01.TTS407.22.00	01.TTS407.60.00	01.TTS409.02.00
BAUPLAST / Bau 500	9	20	00.IZK002.0E.00	01.TTS407.11.00	01.TTS407.21.00		01.TTS409.01.00
BAUPLAST / Bau 600	13	20	00.IZK004.0E.00	01.TTS407.12.00	01.TTS407.22.00	01.TTS407.60.00	01.TTS409.02.00
BAUPLAST / Bau 700	13	20	00.IZK004.0E.00	01.TTS407.12.00	01.TTS407.22.00	01.TTS407.60.00	01.TTS409.02.00
BAUPLAST / Bau 900	13	20	00.IZK004.0E.00	01.TTS407.12.00	01.TTS407.22.00	01.TTS407.60.00	01.TTS409.02.00
BAUPLAST / Bau 950	13	20	00.IZK004.0E.00	01.TTS407.12.00	01.TTS407.22.00	01.TTS407.60.00	01.TTS409.02.00
EGEPEN / Legend	13	20	00.IZK020.0E.00	01.TTS407.12.00	01.TTS407.22.00	01.TTS407.60.00	01.TTS409.02.00
EGEPEN / Legend Art	13	20	00.IZK004.0E.00	01.TTS407.12.00	01.TTS407.22.00	01.TTS407.60.00	01.TTS409.02.00
EGEPEN / Zendow	13	20	00.IZK020.0E.00	01.TTS407.12.00	01.TTS407.22.00	01.TTS407.60.00	01.TTS409.02.00
EGEPEN / Zendow Plus	13	20	00.IZK020.0E.00	01.TTS407.12.00	01.TTS407.22.00	01.TTS407.60.00	01.TTS409.02.00
EGEPEN / Fusion	13	20	00.IZK020.0E.00	01.TTS407.12.00	01.TTS407.22.00	01.TTS407.60.00	01.TTS409.02.00
EGEPEN / Everest Max	13	20	00.IZK020.0E.00	01.TTS407.12.00	01.TTS407.22.00	01.TTS407.60.00	01.TTS409.02.00
ENDERPEN / Highline	13	20	00.IZK004.0E.00	01.TTS407.12.00	01.TTS407.22.00	01.TTS407.60.00	01.TTS409.02.00
ENDERPEN / Vizyonline	13	20	00.IZK004.0E.00	01.TTS407.12.00	01.TTS407.22.00	01.TTS407.60.00	01.TTS409.02.00
ENDERPEN / Klasline	13	20	00.IZK004.0E.00	01.TTS407.12.00	01.TTS407.22.00	01.TTS407.60.00	01.TTS409.02.00
ERPEN / Extraline 54	13	20	00.IZK021.0E.00	01.TTS407.12.00	01.TTS407.22.00	01.TTS407.60.00	01.TTS409.02.00
ERPEN / Smartline 62	13	20	00.IZK021.0E.00	01.TTS407.12.00	01.TTS407.22.00	01.TTS407.60.00	01.TTS409.02.00
ERPEN / Combiline 72	13	20	00.IZK021.0E.00	01.TTS407.12.00	01.TTS407.22.00	01.TTS407.60.00	01.TTS409.02.00
ERPEN / Multiline 82	13	20	00.IZK021.0E.00	01.TTS407.12.00	01.TTS407.22.00	01.TTS407.60.00	01.TTS409.02.00
ERPEN / Premium Series	13	20	00.IZK021.0E.00	01.TTS407.12.00	01.TTS407.22.00	01.TTS407.60.00	01.TTS409.02.00
EUROLINE / S60 Luxe	13	20	00.IZK021.0E.00	01.TTS407.12.00	01.TTS407.22.00	01.TTS407.60.00	01.TTS409.02.00

Profile list

PROFILE NAME	FITTING AXIS	OVERLAP HEIGHT	STANDARD STRIKER	TILT STRIKER VERTICAL	TILT STRIKER HORIZONTAL	SECURITY STRIKER	LIFTING PLATE
EUROLINE / S60 Deluxe	13	20	00.IZK021.0E.00	01.TTS407.12.00	01.TTS407.22.00	01.TTS407.60.00	01.TTS409.02.00
EUROLINE / S70 Deluxe	13	20	00.IZK021.0E.00	01.TTS407.12.00	01.TTS407.22.00	01.TTS407.60.00	01.TTS409.02.00
EUROLINE / S70 Luxe	13	20	00.IZK021.0E.00	01.TTS407.12.00	01.TTS407.22.00	01.TTS407.60.00	01.TTS409.02.00
EUROLINE / E60 Luxe	13	20	00.IZK021.0E.00	01.TTS407.12.00	01.TTS407.22.00	01.TTS407.60.00	01.TTS409.02.00
EUROPEN / Block Profil	13	20	00.IZK004.0E.00	01.TTS407.12.00	01.TTS407.22.00	01.TTS407.60.00	01.TTS409.02.00
EUROPEN / Superclass	13	20	00.IZK004.0E.00	01.TTS407.12.00	01.TTS407.22.00	01.TTS407.60.00	01.TTS409.02.00
EUROPEN / Grande	13	20	00.IZK004.0E.00	01.TTS407.12.00	01.TTS407.22.00	01.TTS407.60.00	01.TTS409.02.00
EUROPEN / Dorlion	13	20	00.IZK004.0E.00	01.TTS407.12.00	01.TTS407.22.00	01.TTS407.60.00	01.TTS409.02.00
EUROPEN / Ventana	13	20	00.IZK004.0E.00	01.TTS407.12.00	01.TTS407.22.00	01.TTS407.60.00	01.TTS409.02.00
FIRATPEN / Selenit 75	13	20	00.IZK004.0E.00	01.TTS407.12.00	01.TTS407.22.00	01.TTS407.60.00	01.TTS409.02.00
FIRATPEN / Garnet 70	13	20	00.IZK004.0E.00	01.TTS407.12.00	01.TTS407.22.00	01.TTS407.60.00	01.TTS409.02.00
FIRATPEN / Elegance 80	13	20	00.IZK004.0E.00	01.TTS407.12.00	01.TTS407.22.00	01.TTS407.60.00	01.TTS409.02.00
FIRATPEN / Redonit 85	13	20	00.IZK004.0E.00	01.TTS407.12.00	01.TTS407.22.00	01.TTS407.60.00	01.TTS409.02.00
FILPEN / Gold 60	13	20	00.IZK004.0E.00	01.TTS407.12.00	01.TTS407.22.00	01.TTS407.60.00	01.TTS409.02.00
FILPEN / Gold 70	13	20	00.IZK004.0E.00	01.TTS407.12.00	01.TTS407.22.00	01.TTS407.60.00	01.TTS409.02.00
FILPEN / Gold 80	13	20	00.IZK004.0E.00	01.TTS407.12.00	01.TTS407.22.00	01.TTS407.60.00	01.TTS409.02.00
GEALAN / S7000	13	20	00.IZK004.0E.00	01.TTS407.12.00	01.TTS407.22.00	01.TTS407.60.00	01.TTS409.02.00
GEALAN / S8000	13	20	00.IZK004.0E.00	01.TTS407.12.00	01.TTS407.22.00	01.TTS407.60.00	01.TTS409.02.00
GEALAN / S9000	13	20	00.IZK004.0E.00	01.TTS407.12.00	01.TTS407.22.00	01.TTS407.60.00	01.TTS409.02.00
KBE / AD	9	20	00.IZK002.0E.00	01.TTS407.11.00	01.TTS407.21.00		01.TTS409.01.00
KBE / 70 mm	13	20	00.IZK004.0E.00	01.TTS407.12.00	01.TTS407.22.00	01.TTS407.60.00	01.TTS409.02.00
KOMMERLING / 70 mm systeme	13	20	00.IZK005.0E.00	01.TTS407.12.00	01.TTS407.22.00	01.TTS407.60.00	01.TTS409.02.00
KOMMERLING / 76 mm systeme	13	20	00.IZK005.0E.00	01.TTS407.12.00	01.TTS407.22.00	01.TTS407.60.00	01.TTS409.02.00
KOMMERLING / 88 mm systeme	13	20	00.IZK005.0E.00	01.TTS407.12.00	01.TTS407.22.00	01.TTS407.60.00	01.TTS409.02.00
KOMPEN / Noble	13	20	00.IZK004.0E.00	01.TTS407.12.00	01.TTS407.22.00	01.TTS407.60.00	01.TTS409.02.00
KOMPEN / Advance	13	20	00.IZK004.0E.00	01.TTS407.12.00	01.TTS407.22.00	01.TTS407.60.00	01.TTS409.02.00
KOMPEN / Kom 500	9	20	00.IZK002.0E.00	01.TTS407.11.00	01.TTS407.21.00	01.TTS407.60.00	01.TTS409.02.00
KOMPEN / Kom 600	13	20	00.IZK004.0E.00	01.TTS407.12.00	01.TTS407.22.00	01.TTS407.60.00	01.TTS409.02.00
KOMPEN / Kom 700	13	20	00.IZK004.0E.00	01.TTS407.12.00	01.TTS407.22.00	01.TTS407.60.00	01.TTS409.02.00
KOMPEN / Kom 900	13	20	00.IZK004.0E.00	01.TTS407.12.00	01.TTS407.22.00	01.TTS407.60.00	01.TTS409.02.00
KOMPEN / Kom 950	13	20	00.IZK004.0E.00	01.TTS407.12.00	01.TTS407.22.00	01.TTS407.60.00	01.TTS409.02.00
MIROPLAST / 76 AD / MD (Ukrayna)	13	20	00.IZK004.0E.00	01.TTS407.12.00	01.TTS407.22.00	01.TTS407.60.00	01.TTS409.02.00
MIROPLAST / 5S (Ukrayna)	13	20	00.IZK004.0E.00	01.TTS407.12.00	01.TTS407.22.00	01.TTS407.60.00	01.TTS409.02.00
MIROPLAST / 6S (Ukrayna)	13	20	00.IZK004.0E.00	01.TTS407.12.00	01.TTS407.22.00	01.TTS407.60.00	01.TTS409.02.00
MIROPLAST / 7S (Ukrayna)	13	20	00.IZK004.0E.00	01.TTS407.12.00	01.TTS407.22.00	01.TTS407.60.00	01.TTS409.02.00
MIROPLAST / 8S (Ukrayna)	13	20	00.IZK004.0E.00	01.TTS407.12.00	01.TTS407.22.00	01.TTS407.60.00	01.TTS409.02.00
NATURELPEN / N5400	13	20	00.IZK004.0E.00	01.TTS407.12.00	01.TTS407.22.00	01.TTS407.60.00	01.TTS409.02.00
NATURELPEN / N6000	13	20	00.IZK004.0E.00	01.TTS407.12.00	01.TTS407.22.00	01.TTS407.60.00	01.TTS409.02.00
NATURELPEN / N6400	13	20	00.IZK004.0E.00	01.TTS407.12.00	01.TTS407.22.00	01.TTS407.60.00	01.TTS409.02.00
NATURELPEN / N7000	13	20	00.IZK004.0E.00	01.TTS407.12.00	01.TTS407.22.00	01.TTS407.60.00	01.TTS409.02.00
PENSA / Safir	13	20	00.IZK004.0E.00	01.TTS407.12.00	01.TTS407.22.00	01.TTS407.60.00	01.TTS409.02.00
PENSA / Ultra	13	20	00.IZK004.0E.00	01.TTS407.12.00	01.TTS407.22.00	01.TTS407.60.00	01.TTS409.02.00
PENSA / Eco Ultra	13	20	00.IZK004.0E.00	01.TTS407.12.00	01.TTS407.22.00	01.TTS407.60.00	01.TTS409.02.00
PENSA / Delüx	13	20	00.IZK004.0E.00	01.TTS407.12.00	01.TTS407.22.00	01.TTS407.60.00	01.TTS409.02.00
PENSA / Lüx	13	20	00.IZK004.0E.00	01.TTS407.12.00	01.TTS407.22.00	01.TTS407.60.00	01.TTS409.02.00
PENSA / Premier	13	20	00.IZK004.0E.00	01.TTS407.12.00	01.TTS407.22.00	01.TTS407.60.00	01.TTS409.02.00
PENSA / Sıla	13	20	00.IZK004.0E.00	01.TTS407.12.00	01.TTS407.22.00	01.TTS407.60.00	01.TTS409.02.00

Profile list

PROFILE NAME	FITTING AXIS	OVERLAP HEIGHT	STANDARD STRIKER	TILT STRIKER VERTICAL	TILT STRIKER HORIZONTAL	SECURITY STRIKER	LIFTING PLATE
PENSA / Avantaj	13	20	00.IZK004.0E.00	01.TTS407.12.00	01.TTS407.22.00	01.TTS407.60.00	01.TTS409.02.00
PİMAPEN / Nirvana	13	20	00.IZK004.0E.00	01.TTS407.12.00	01.TTS407.22.00	01.TTS407.60.00	01.TTS409.02.00
PİMAPEN / Carisma	13	20	00.IZK004.0E.00	01.TTS407.12.00	01.TTS407.22.00	01.TTS407.60.00	01.TTS409.02.00
PLASPEN / P 80	13	20	00.IZK004.0E.00	01.TTS407.12.00	01.TTS407.22.00	01.TTS407.60.00	01.TTS409.02.00
PLASPEN / P873	13	20	00.IZK004.0E.00	01.TTS407.12.00	01.TTS407.22.00	01.TTS407.60.00	01.TTS409.02.00
PLASPEN / P790	13	20	00.IZK004.0E.00	01.TTS407.12.00	01.TTS407.22.00	01.TTS407.60.00	01.TTS409.02.00
PLASPEN / P777	13	20	00.IZK004.0E.00	01.TTS407.12.00	01.TTS407.22.00	01.TTS407.60.00	01.TTS409.02.00
PLASPEN / P 750	13	20	00.IZK004.0E.00	01.TTS407.12.00	01.TTS407.22.00	01.TTS407.60.00	01.TTS409.02.00
PLASPEN / P760	13	20	00.IZK004.0E.00	01.TTS407.12.00	01.TTS407.22.00	01.TTS407.60.00	01.TTS409.02.00
PLASPEN / P770	13	20	00.IZK004.0E.00	01.TTS407.12.00	01.TTS407.22.00	01.TTS407.60.00	01.TTS409.02.00
PLASPEN / P632	13	20	00.IZK004.0E.00	01.TTS407.12.00	01.TTS407.22.00	01.TTS407.60.00	01.TTS409.02.00
PLASPEN / P330	9	20	00.IZK002.0E.00	01.TTS407.11.00	01.TTS407.21.00		01.TTS409.01.00
PROPEN / PRO 60	13	20	00.IZK004.0E.00	01.TTS407.12.00	01.TTS407.22.00	01.TTS407.60.00	01.TTS409.02.00
PROPEN / PRO 70	13	20	00.IZK004.0E.00	01.TTS407.12.00	01.TTS407.22.00	01.TTS407.60.00	01.TTS409.02.00
PROPEN / PRO 80	13	20	00.IZK004.0E.00	01.TTS407.12.00	01.TTS407.22.00	01.TTS407.60.00	01.TTS409.02.00
REHAU / Geneo	13	20	00.IZK004.0E.00	01.TTS407.12.00	01.TTS407.22.00	01.TTS407.60.00	01.TTS409.02.00
REHAU / Brillant	13	20	00.IZK004.0E.00	01.TTS407.12.00	01.TTS407.22.00	01.TTS407.60.00	01.TTS409.02.00
REHAU / Euro-Design 70	13	20	00.IZK004.0E.00	01.TTS407.12.00	01.TTS407.22.00	01.TTS407.60.00	01.TTS409.02.00
REHAU / Euro-Design 60	13	20	00.IZK004.0E.00	01.TTS407.12.00	01.TTS407.22.00	01.TTS407.60.00	01.TTS409.02.00
RESMAN / Safir	13	20	00.IZK005.0E.00	01.TTS407.12.00	01.TTS407.22.00	01.TTS407.60.00	01.TTS409.02.00
RESMAN / Dorado	13	20	00.IZK005.0E.00	01.TTS407.12.00	01.TTS407.22.00	01.TTS407.60.00	01.TTS409.02.00
RESMAN / Dorado Gold	13	20	00.IZK005.0E.00	01.TTS407.12.00	01.TTS407.22.00	01.TTS407.60.00	01.TTS409.02.00
RESMAN / Revotech	13	20	00.IZK005.0E.00	01.TTS407.12.00	01.TTS407.22.00	01.TTS407.60.00	01.TTS409.02.00
SALAMANDER / Streamline	13	20	00.IZK004.0E.00	01.TTS407.12.00	01.TTS407.22.00	01.TTS407.60.00	01.TTS409.02.00
SARAYPEN / S60	13	20	00.IZK004.0E.00	01.TTS407.12.00	01.TTS407.22.00	01.TTS407.60.00	01.TTS409.02.00
SARAYPEN / S70	13	20	00.IZK004.0E.00	01.TTS407.12.00	01.TTS407.22.00	01.TTS407.60.00	01.TTS409.02.00
SARAYPEN / S76	13	20	00.IZK004.0E.00	01.TTS407.12.00	01.TTS407.22.00	01.TTS407.60.00	01.TTS409.02.00
SCHONLINE / LINE 60	13	20	00.IZK004.0E.00	01.TTS407.12.00	01.TTS407.22.00	01.TTS407.60.00	01.TTS409.02.00
SCHONLINE / LINE 70	13	20	00.IZK004.0E.00	01.TTS407.12.00	01.TTS407.22.00	01.TTS407.60.00	01.TTS409.02.00
SCHONLINE / LINE 80	13	20	00.IZK004.0E.00	01.TTS407.12.00	01.TTS407.22.00	01.TTS407.60.00	01.TTS409.02.00
SCHONLINE / LINE 90	13	20	00.IZK004.0E.00	01.TTS407.12.00	01.TTS407.22.00	01.TTS407.60.00	01.TTS409.02.00
SCHUCO / Corona AS 60	13	20	00.IZK004.0E.00	01.TTS407.12.00	01.TTS407.22.00	01.TTS407.60.00	01.TTS409.02.00
SCHUCO / Corona CT 70	13	20	00.IZK004.0E.00	01.TTS407.12.00	01.TTS407.22.00	01.TTS407.60.00	01.TTS409.02.00
SCHUCO / Corona SI 82	13	20	00.IZK004.0E.00	01.TTS407.12.00	01.TTS407.22.00	01.TTS407.60.00	01.TTS409.02.00
TECNOPLAS / Supertec	13	20	00.IZK004.0E.00	01.TTS407.12.00	01.TTS407.22.00	01.TTS407.60.00	01.TTS409.02.00
TECNOPLAS / Grosstec	13	20	00.IZK004.0E.00	01.TTS407.12.00	01.TTS407.22.00	01.TTS407.60.00	01.TTS409.02.00
TECNOPLAS / Startec	13	20	00.IZK004.0E.00	01.TTS407.12.00	01.TTS407.22.00	01.TTS407.60.00	01.TTS409.02.00
TECNOPLAS / Extratec	13	20	00.IZK004.0E.00	01.TTS407.12.00	01.TTS407.22.00	01.TTS407.60.00	01.TTS409.02.00
TECNOPLAS / Divatec	13	20	00.IZK004.0E.00	01.TTS407.12.00	01.TTS407.22.00	01.TTS407.60.00	01.TTS409.02.00
TECNOPLAS / Megatec	13	20	00.IZK004.0E.00	01.TTS407.12.00	01.TTS407.22.00	01.TTS407.60.00	01.TTS409.02.00
TECNOPLAS / Ultratec	13	20	00.IZK004.0E.00	01.TTS407.12.00	01.TTS407.22.00	01.TTS407.60.00	01.TTS409.02.00
UNIPLAST / Superium	13	20	00.IZK004.0E.00	01.TTS407.12.00	01.TTS407.22.00	01.TTS407.60.00	01.TTS409.02.00
UNIPLAST / Premium	13	20	00.IZK004.0E.00	01.TTS407.12.00	01.TTS407.22.00	01.TTS407.60.00	01.TTS409.02.00
UNIPLAST / Optimum	13	20	00.IZK004.0E.00	01.TTS407.12.00	01.TTS407.22.00	01.TTS407.60.00	01.TTS409.02.00
VEKA / Softline 82 AD	13	20	00.IZK004.0E.00	01.TTS407.12.00	01.TTS407.22.00	01.TTS407.60.00	01.TTS409.02.00
VEKA / Softline 82 MD	13	20	00.IZK004.0E.00	01.TTS407.12.00	01.TTS407.22.00	01.TTS407.60.00	01.TTS409.02.00
VEKA / Softline 76 AD	13	20	00.IZK004.0E.00	01.TTS407.12.00	01.TTS407.22.00	01.TTS407.60.00	01.TTS409.02.00

Profile list

PROFILE NAME	FITTING AXIS	OVERLAP HEIGHT	STANDARD STRIKER	TILT STRIKER VERTICAL	TILT STRIKER HORIZONTAL	SECURITY STRIKER	LIFTING PLATE
VEKA / Softline 76 MD	13	20	00.IZK004.0E.00	01.TTS407.12.00	01.TTS407.22.00	01.TTS407.60.00	01.TTS409.02.00
VEKA / Softline 70 AD	13	20	00.IZK004.0E.00	01.TTS407.12.00	01.TTS407.22.00	01.TTS407.60.00	01.TTS409.02.00
VEKA / AluConnect	13	20	00.IZK005.0E.00	01.TTS407.12.00	01.TTS407.22.00	01.TTS407.60.00	01.TTS409.02.00
WINHOUSE / Selenit 75	9	20	00.IZK004.0E.00	01.TTS407.11.00	01.TTS407.21.00		01.TTS409.01.00
WINHOUSE / Garnet 70	9	20	00.IZK004.0E.00	01.TTS407.11.00	01.TTS407.21.00		01.TTS409.01.00
WINHOUSE / Elegantce 80	9	20	00.IZK004.0E.00	01.TTS407.11.00	01.TTS407.21.00		01.TTS409.01.00
WINHOUSE / Redonit 85	9	20	00.IZK004.0E.00	01.TTS407.11.00	01.TTS407.21.00		01.TTS409.01.00
WINSA / Dorado 76	13	20	00.IZK005.0E.00	01.TTS407.12.00	01.TTS407.22.00	01.TTS407.60.00	01.TTS409.02.00
WINSA / Revotech Gold	13	20	00.IZK005.0E.00	01.TTS407.12.00	01.TTS407.22.00	01.TTS407.60.00	01.TTS409.02.00
WINSA / Revotech	13	20	00.IZK005.0E.00	01.TTS407.12.00	01.TTS407.22.00	01.TTS407.60.00	01.TTS409.02.00
WINSA / Safir 76	13	20	00.IZK005.0E.00	01.TTS407.12.00	01.TTS407.22.00	01.TTS407.60.00	01.TTS409.02.00
WINTECH / Penwood 750	13	20	00.IZK004.0E.00	01.TTS407.12.00	01.TTS407.22.00	01.TTS407.60.00	01.TTS409.02.00
WINTECH / Penwood 760	13	20	00.IZK004.0E.00	01.TTS407.12.00	01.TTS407.22.00	01.TTS407.60.00	01.TTS409.02.00
WINTECH / Penwood 632	13	20	00.IZK004.0E.00	01.TTS407.12.00	01.TTS407.22.00	01.TTS407.60.00	01.TTS409.02.00
WINTECH / W800	13	20	00.IZK004.0E.00	01.TTS407.12.00	01.TTS407.22.00	01.TTS407.60.00	01.TTS409.02.00
WINTECH / W873	13	20	00.IZK004.0E.00	01.TTS407.12.00	01.TTS407.22.00	01.TTS407.60.00	01.TTS409.02.00
WINTECH / W750	9	20	00.IZK004.0E.00	01.TTS407.11.00	01.TTS407.21.00		01.TTS409.01.00
WINTECH / 760	13	20	00.IZK004.0E.00	01.TTS407.12.00	01.TTS407.22.00	01.TTS407.60.00	01.TTS409.02.00
WINTECH / 750	13	21	00.IZK004.0E.00	01.TTS407.12.00	01.TTS407.22.00	01.TTS407.60.00	01.TTS409.02.00
WINTECH / 777	13	21	00.IZK004.0E.00	01.TTS407.12.00	01.TTS407.22.00	01.TTS407.60.00	01.TTS409.02.00
WINTECH / 790	9	20	00.IZK004.0E.00	01.TTS407.11.00	01.TTS407.21.00		01.TTS409.01.00

Notes

akpen®



“COOPERATION”

www.akpennew.com

akpen®

uPVC & ALUMINIUM WINDOW & DOOR ACCESSORIES

Product Development



High Technology



Green Energy



"Since 1988"

Research & Development

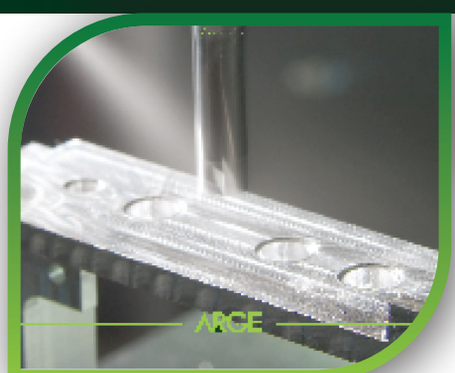

Renovation



TILT & TURN SYSTEMS

akpen®

uPVC & ALUMINIUM WINDOW & DOOR ACCESSORIES

akpen®

AKPEN PLASTİK PENCERE
AKSESUARLARI NAKLİYE
SAN. İÇ VE DIŞ TİC. A.Ş.

facebook.com/akpennew
instagram.com/akpennew
info@akpennew.com
www.akpennew.com

Hadımköy Mah. Uçurtma Sk. No:6,
34555 Arnavutköy/İSTANBUL/TÜRKİYE
T: +90 212 798 34 34
F: +90 212 798 35 28
G: +90 533 705 5245